FURUNO

OPERATOR'S MANUAL

Model FA-50

CLASS B AIS TRANSPONDER

FURUNO ELECTRIC CO., LTD.

www.furuno.com

(Elemental Chlorine Free)
The paper used in this manual
is elemental chlorine free.

FURUNO ELECTRIC CO., LTD.

9-52, Ashihara-cho,
Nishinomiya, 662-8580, JAPAN

·FURUNO Authorized Distributor/Dealer

All rights reserved. Printed in Japan

A: MAR. 2008
N1: MAR 20, 2019

Pub. No. OME-44420-N1

(ETMI) FA-50

00019411512

IMPORTANT NOTICES

General

- This manual has been authored with simplified grammar, to meet the needs of international users.
- The operator of this equipment must read and follow the descriptions in this manual.
  Wrong operation or maintenance can cancel the warranty or cause injury.
- Do not copy any part of this manual without written permission from FURUNO.
- If this manual is lost or worn, contact your dealer about replacement.
- The contents of this manual and equipment specifications can change without notice.
- The example screens (or illustrations) shown in this manual can be different from the screens you see on your display. The screens you see depend on your system configuration and equipment settings.
- Save this manual for future reference.
- Any modification of the equipment (including software) by persons not authorized by FURUNO will cancel the warranty.
- The following concern acts as our importer in Europe, as defined in DECISION No 768/2008/EC.
  - Name: FURUNO EUROPE B.V.
  - Address: Ridderhaven 19B, 2984 BT Ridderkerk, The Netherlands
- All brand and product names are trademarks, registered trademarks or service marks of their respective holders.

How to discard this product

Discard this product according to local regulations for the disposal of industrial waste. For disposal in the USA, see the homepage of the Electronics Industries Alliance (http://www.eiae.org/) for the correct method of disposal.

How to discard a used battery

Some FURUNO products have a battery(ies). To see if your product has a battery, see the chapter on Maintenance. If a battery is used, tape the + and - terminals of battery before disposal to prevent fire, heat generation caused by short circuit.

In the European Union

The crossed-out trash can symbol indicates that all types of batteries must not be discarded in standard trash, or at a trash site. Take the used batteries to a battery collection site according to your national legislation and the Batteries Directive 2006/66/EU.

In the USA

The Mobius loop symbol (three chasing arrows) indicates that
Ni-Cd and lead-acid rechargeable batteries must be recycled.
Take the used batteries to a battery collection site according to
local laws.

In the other countries

There are no international standards for the battery recycle symbol. The number of symbols can increase when the other countries make their own recycle symbols in the future.

SAFETY INSTRUCTIONS

The operator and installer must read the applicable safety instructions before attempting to install or operate the equipment.

WARNING	Indicates a potentially hazardous situation which, if not avoided, could result in death or serious injury.
CAUTION	Indicates a potentially hazardous situation which, if not avoided, can result in minor or moderate injury.

Warning, Caution Prohibitive Action Mandatory Action

Safety instructions for the operator

WARNING

Do not open the shield cover.

Only qualified personnel should work inside the equipment.

Do not disassemble or modify the equipment.

Fire, electrical shock or serious injury can result.

Immediately turn off the power at the power source if
- **water leaks into the equipment**
- **something is dropped into the equipment**
- **the equipment is emitting smoke or is on fire**
- **the equipment is emitting strange noises**

Continued use of the equipment can cause fire or electrical shock. Contact a FURUNO dealer or agent for service.

Do not operate the equipment with wet hands.

Electrical shock can result.

Use the proper fuse.

Use of the wrong fuse can cause fire or electrical shock.

WARNING

Do not place liquid-filled containers on the top of the equipment.

Fire or electrical shock can result if a liquid spills into the equipment.

Make sure no rain or water splash leaks into the equipment.

Fire or electrical shock can result if water leaks into the equipment.

Warning labels are attached to the equipment. Do not remove these labels. If a label is missing or illegible, contact a FURUNO agent or dealer replacement.

WARNING
To avoid electrical shock, do not remove cover. No user-serviceable parts inside.

Name: Warning Label (1)
Type: 86-003-1011-1
Code No.: 100-236-232-10

WARNING
To avoid electrical shock, do not remove cover.
No user-serviceable parts inside.

Name: Warning Label (2)
Type: 86-129-1001-1
Code No.: 100-236-742-10

Safety instructions for the installer

⚠ WARNING

ELECTRICAL SHOCK HAZARD
Do not open the equipment unless totally familiar with electrical circuits and service manual.

Only qualified personnel should work inside the equipment.

Turn off the power at the switchboard before beginning the installation.

Fire or electrical shock can result if the power is left on.

Do not install the equipment where it may get wet from rain or water splash.

Water in the equipment can result in fire, electrical shock or damage to the equipment.

Be sure that the power supply is compatible with the voltage rating of the equipment.

Connecting an incompatible power supply can cause fire or damage the equipment. The voltage rating appears on the inlet of power.

⚠ CAUTION

Observe the following compass safe distances to prevent interference to a magnetic compass:

	Standard compass	Steering compass
FA-50	0.30 m	0.30 m
PR-240	0.90 m	0.60 m
GVA-100-T	0.30 m	0.30 m
DB-1	0.30 m	0.30 m

Radiation Hazard

⚠ WARNING

Do not approach the antenna closer than 0.4 m (MPE by FCC) when it is transmitting.

The antenna emits radio waves which can be harmful to the human body.

RF power density on antenna aperture	Distance	Description required by
100 W/m^2	Nil	IEC 60945
10 W/m^2	0.1 m	IEC 60945
2 W/m^2	0.4 m	MPE by FCC

(MPE: Minimum Permissible Exposure)

TABLE OF CONTENTS

FOREWORD ..... **v**
SYSTEM CONFIGURATIONS ..... **vii**

1. INSTALLATION **1-1**
1.1 Equipment List 1-1
1.2 AIS Transponder FA-50 1-3
1.3 VHF Antenna 1-3
1.4 GPS Antenna 1-5
1.5 GPS/VHF Combined Antenna 1-8
1.6 AC-DC Power Supply (option) 1-14
1.7 Wiring 1-15
1.8 Setting and Adjustments 1-17
1.8.1 COM PORT setup, Network sep 1-17
1.8.2 Ship static 1-21

2. OPERATION **2-1**
2.1 AIS Transponder FA-50 2-1
2.2 RX Message Log 2-2
2.3 Own Vessel Data Display 2-3
2.4 Alarm Status 2-6
2.5 Sensor Status 2-7
2.6 TX Power 2-7
2.7 Silent 2-8

3. MAINTENANCE, TROUBLESHOOTING3-1
3.1 Maintenance 3-1
3.2 Replacing the Fuse 3-2
3.3 Troubleshooting 3-2
3.4 Diagnostics 3-3
3.5 List of Terms 3-4

APPENDIX 1 MENU TREE **AP-1**
APPENDIX 2 VHF CHANNEL LISTS **AP-2**
APPENDIX 3 PARTS LIST, LOCATIONS **AP-4**
APPENDIX 4 DIGITAL INTERFACE **AP-6**
SPECIFICATIONS **SP-1**
PACKING LISTS **A-1**
OUTLINE DRAWINGS **D-1**
INTERCONNECTION DIAGRAM **S-1**
INDEX **IN-1**

FOREWORD

A Word to the Owner of the FA-50

Congratulations on your choice of the FURUNO FA-50 AIS Transponder. We are confident you will see why the FURUNO name has become synonymous with quality and reliability.

Since 1948, FURUNO Electric Company has enjoyed an enviable reputation for quality marine electronics equipment. This dedication to excellence is furthered by our extensive global network of agents and dealers.

This equipment is designed and constructed to meet the rigorous demands of the marine environment. However, no machine can perform its intended function unless operated and maintained properly. Please carefully read and follow the recommended procedures for operation and maintenance.

Thank you for considering and purchasing FURUNO equipment.

Features

The FA-50 is a Class B AIS (Automatic Identification System) capable of exchanging navigation and ship data between own ship and other ships or coastal stations. It complies with IMO MSC. 140(76) Annex 3, A.694, ITU-R M.1371-5 and DSC ITU-R M.825-3. It also complies with IEC 60945 (EMC and environmental conditions) and IEC 62287-1.

FA-50 consists of VHF and GPS antennas, a transponder unit and several associated units. The transponder contains a VHF transmitter, two TDMA receivers on two parallel VHF channels, interface, communication processor, and internal GPS receiver. The internal GPS is a 12-channel all-in-view receiver with a differential capability. It also gives position, COG and SOG when the external GPS. FA-50 receives DSC, time-sharing with TDMA receiver.

The main features are:

- Safety of navigation by automatically exchanging navigational data
- Static data
  - MMSI (Maritime Mobile Service Identity)
  - Call sign & Ship’s name
  - Type of ship
  - Location of position-fixing antenna on the ship
- Dynamic data
  - Ship's position with accuracy indication and integrity status
  - Universal Time Coordinated (UTC)
  - Course over ground (COG)
  - Speed over ground (SOG)
  - Heading
- Voyage-related data
  - Hazardous cargo (type)
- Short safety-related messages are receivable.

- Interfaces for radar, PC for future networking expansion
- GPS/VHF combined antenna for easy installation available
- Built-in GPS receiver for position-fixing device

Program Version

Item	Program No.	Version No.	Date
FA-50 AIS Transponder Main Program	0550233	02.xx	April 2017

“xx” denotes minor modifications.

CE declaration

With regards to CE declarations, please refer to our website (www.furuno.com), for further information about RoHS conformity declarations.

SYSTEM CONFIGURATIONS

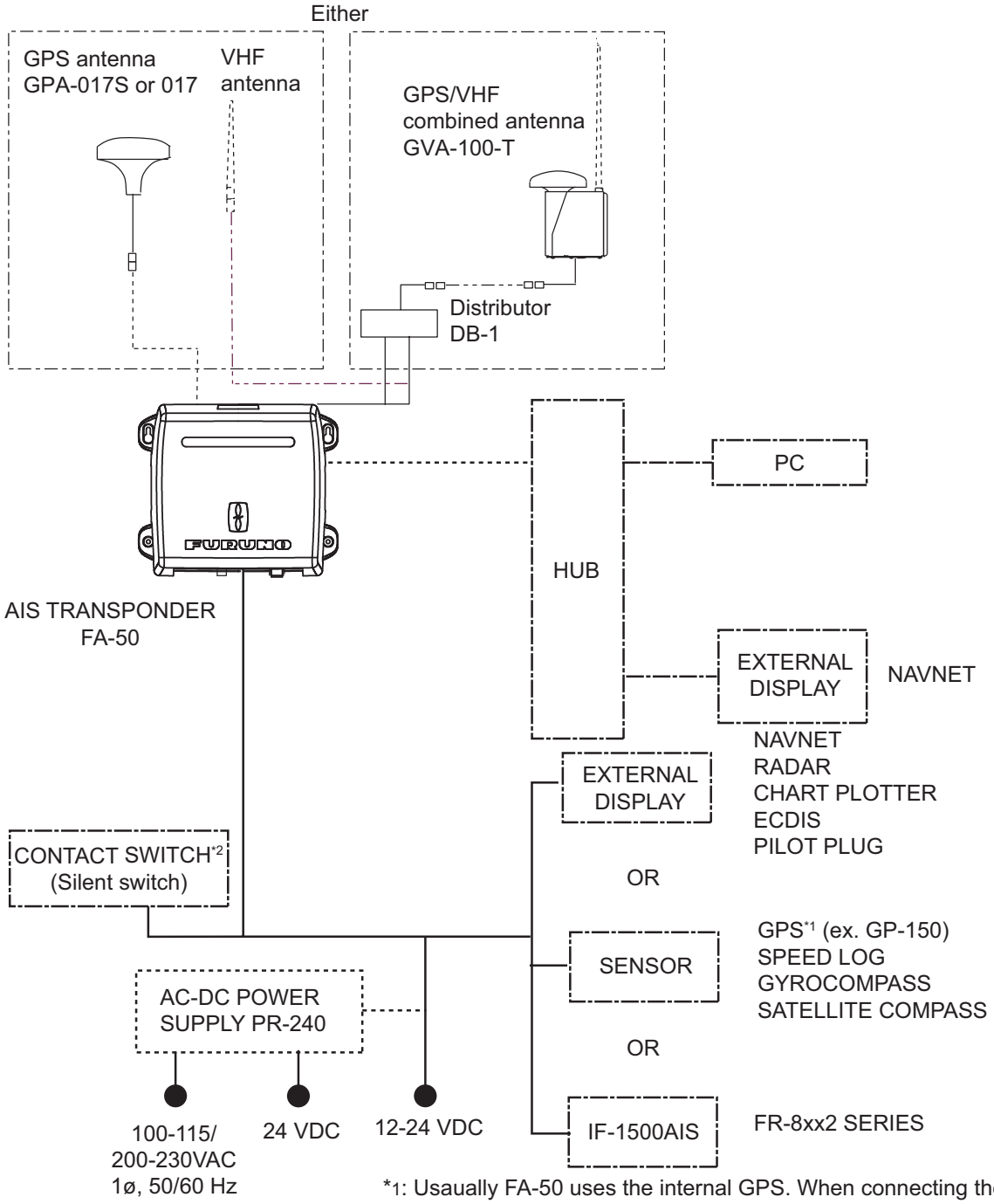

: Standard supply
: Optional supply
: Local supply

*1: Usaually FA-50 uses the internal GPS. When connecting the external GPS, use one which satisfies the following points.
1) Outputs DTM sentence (WGS-84 can be chosen.)
2) Outputs GBS sentence.
3) Outputs sentences with the mode indicator;
GNS: Ver.3.0 and later GLL: Ver.2.0 and later
GGA: Ver.2.0 and later RMC: Ver.1.5 and later
GPS navigator GP-150 meets with requirements shown above.

*2: Only for ships that are not required to carry a class B transponder.

This page is intentionally left blank.

1. INSTALLATION

1.1 Equipment List

Standard supply

Name	Type	Code No.	Qty	Remarks
AIS transponder	FA-50	-	1	
Antenna unit	GVA-100-T	-	1	GPS/VHF combined
	GPA-017S	-	1 set	GPS antenna
	GPA-017	-	1 set	GPS antenna w/10 m cable
Distributor Unit	DB-1	-	1	For GVA-100-T
Spare parts	SP05-05801	001-031-960	1 set	4A fuses (Type: FGMB 125V 4A, Code No.: 000-157-482-10)
Installation materials	CP24-00502	005-955-560	1 set	For GPA-017S
	CP05-11401	001-031-970	1 set	For FA-50, self-tapping screws (Type: 4x20, Code No.: 000-158-850-10)
	TNC-PS/PS-3D-L15M-R	000-133-670-11	1	For GPA-017S, 15 m cable
	CP24-00101	005-950-730	1 set	For DB-1, self-tapping screws (Type: 4x30, Code No.: 000-162-659-10)
	CP24-00141	005-952-330	1	For GVA-100-T

Optional supply

Name	Type	Code No.	Remarks
AC-DC power supply	PR-240	-	
Antenna	CX4-3/FEC	001-474-340-00	
	FAB-151D	001-144-490-10	
Antenna Fixing Bracket	N173F/FEC	001-474-350-00	For CX4-3/FEC (ϕ49-90)
	N174F/FEC	001-494-890-00	For CX4-3/FEC (ϕ30-61)
	CP05-14001	001-430-360	Bracket M-15AS1
Antenna cable set	CP20-02700	004-381-160	For GPA-017S
	CP20-02710	004-381-170	For GPA-017S
	CP24-00300	000-041-938	For GVA-100-T
	CP24-00310	000-041-939	For GVA-100-T
Coaxial cable	TNC-PS/PS-3D-L15M-R	000-133-670-11	TNC-TNC, 15 m
Distributor Unit	DB-1	-	
Right-angle antenna base	No.13-QA330	000-803-239	For GPA-017/S
L-angle antenna base	No.13-QA310	000-803-240	For GPA-017/S
Antenna base for rail mount	No.13-RC5160	000-806-114	For GPA-017/S
Mast mount fixture	CP20-01111	004-365-780	For GPA-017/S
LAN cable	P5E-4PTX-BL L=2M	000-164-634-10	2 m
	P5E-4PTX-BL L=10M	000-164-637-10	10 m
Cable assy	MJ-A6SPF0017-010C	000-159-704-11	For NavNet vx2, 1 m
	MJ-A6SPF0017-050C	000-159-705-11	For NavNet vx2, 5 m
	MJ-A6SPF0017-100C	000-159-706-11	For NavNet vx2, 10 m
	MJ-A6SPF0017-200C	000-159-707-11	For NavNet vx2, 20 m
	MJ-A6SPF0017-300C	000-159-708-11	For NavNet vx2, 30 m
AIS INTERFACE UNIT	IF-1500AIS	000-090-565	

Note: One FA-50 can be installed on a network.

1.2 AIS Transponder FA-50

Mounting considerations, mounting

The FA-50 can be mounted on a desktop, deck or on a bulkhead. When selecting a mounting location, keep the following points in mind:

- The temperature and humidity should be moderate and stable.
- Locate the unit away from exhaust pipes and vents.
- The mounting location should be well ventilated.
- Mount the unit where shock and vibration are minimal.
- Keep the unit away from electromagnetic field-generating equipment such as motors and generators.
- A magnetic compass will be affected if the FA-50 is placed too close to it. Observe the compass safe distances noted in the safety instructions to prevent disturbance to the magnetic compass.

Fix the unit to the mounting location with 4x20 self-tapping screws (supplied).

1.3 VHF Antenna

Location

The location of the AIS VHF-antenna should be carefully considered. Digital communication is more sensitive than analog/voice communication to interference created by reflections in obstructions like masts and booms. It may be necessary to relocate the VHF radiotelephone antenna to minimize interference effects. To minimize interference effects, the following guidelines apply:

- The AIS VHF antenna should be placed in an elevated position that is as free as possible with a minimum of 0.5 meters in the horizontal direction from constructions made of conductive materials. The antenna should not be installed close to any large vertical obstruction. The objective for the AIS VHF antenna is to see the horizon freely through 360 degrees.
- There should not be more than one antenna on the same plane. The AIS VHF antenna should be mounted directly above or below the ship's primary VHF radiotelephone antenna, with no horizontal separation and with a minimum of 2.8 meters vertical separation. If it is located on the same plane as other antennas, the distance apart should be at least 10 meters.
- Install the VHF whip antenna (option) referring to the outline drawing at the back of this manual. Separate this antenna from other VHF radiotelephone antennas as shown below to prevent interference to the FA-50.

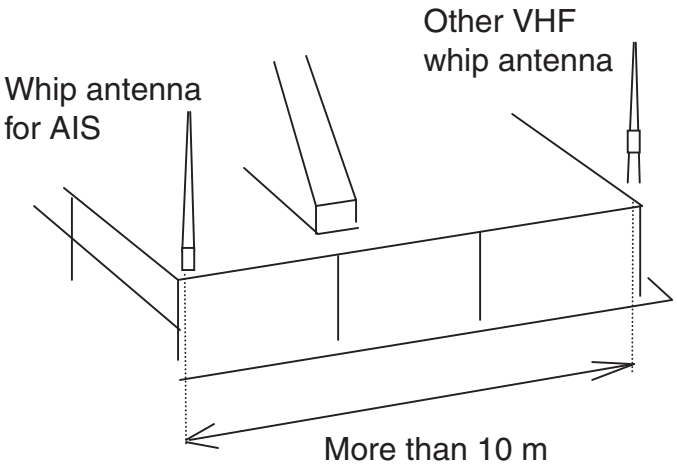

Horizontal separation distance

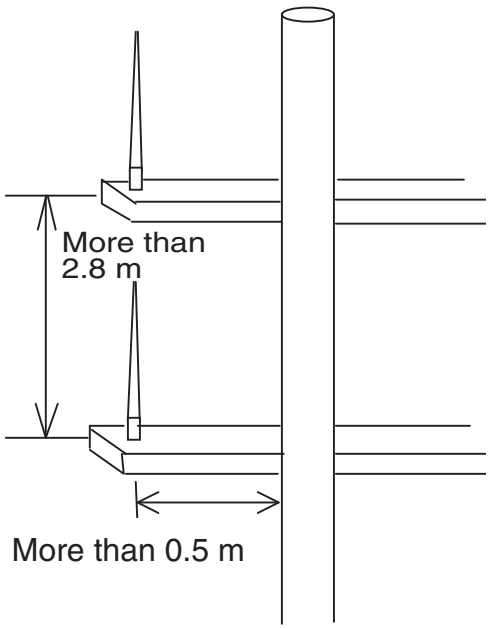

Vertical separation distance

Cabling

- Use coaxial cable type 5D-2V or the equivalent.
- The cable should be kept as short as possible to minimize signal attenuation, and the maximum length is 50 meters.
- All outdoor-installed connectors on coaxial cables should be fitted with preventive isolation such as vulcanizing tape to protect against water penetration into the antenna cable.
- Coaxial cables should be installed in separate signal cable channels/tubes and at least 10 cm away from power supply cables. Crossing of cables should be done at right angles (90 degrees). The minimum bend radius of the coaxial cable should be 5 times the cable's outer diameter.

1.4 GPS Antenna

Install the GPS antenna unit referring to the outline drawing at the back of this manual. When selecting a mounting location for the antenna, keep in mind the following points.

- Select a location out of the radar beam. The radar beam will obstruct or prevent reception of the GPS satellite signal.
- There should be no interfering object within the line-of-sight to the satellites. Objects within line-of-sight to a satellite, for example, a mast, may block reception or prolong acquisition time.
- Mount the antenna unit as high as possible to keep it free of interfering objects and water spray, which can interrupt reception of GPS satellite signal if the water freezes.

Extending antenna cable

Three types of antenna cable extensions are optionally available.

- Antenna cable set CP20-02700

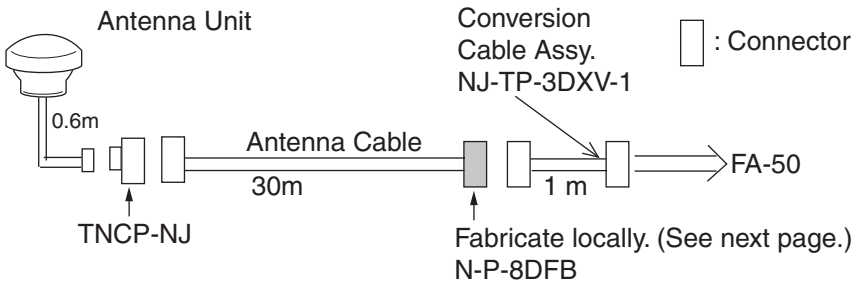

Waterproofing connector
Wrap connector with vulcanizing tape and then vinyl tape. Bind the tape end with a cable-tie.

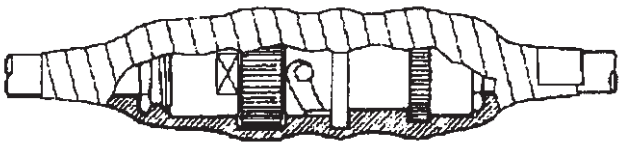

- Antenna cable set CP20-02710 (8D-FB-CV, 50 m)
- Connect the cable the same as 1) above.
  Note: The length of this cable should be less than 20 m to prevent signal loss. The coax. coupling cable assy.(type: NJ-TP-3DXV-1, code no. 000-123-809), coaxial connector (N-P-8DFB; supplied), vulcanizing tape and vinyl tape are required. Fabricate both ends of the cable as shown in the figure on the next page.

How to attach the connector N-P-8DFB for cable 8D-FB-CV

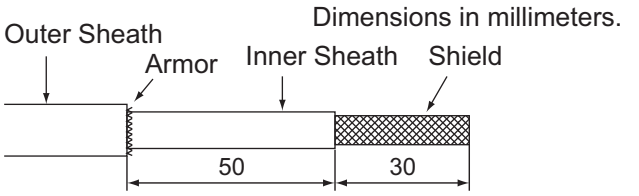

Remove outer sheath and armor by the dimensions shown left.
Expose inner sheath and shield by the dimensions shown left.

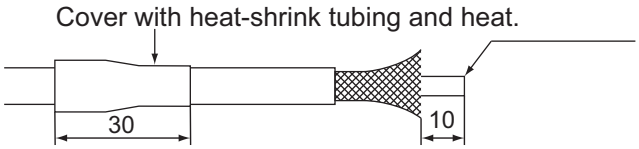

Remove insulator and core by 10 mm.

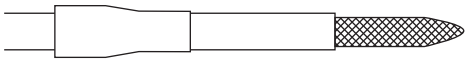

Twist shield end.

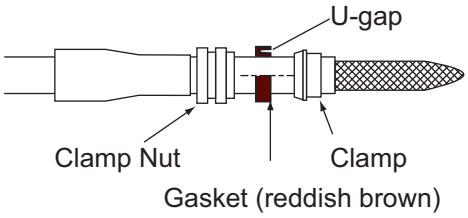

Slip on clamp nut, gasket and clamp as shown left.

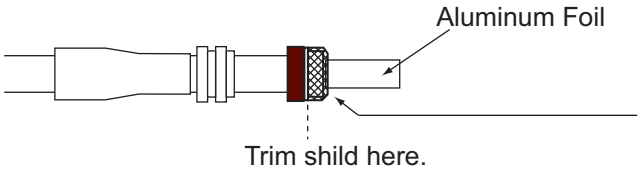

Fold back shield over clamp and trim.

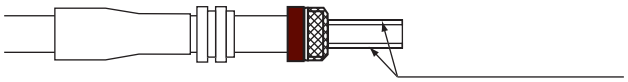

Cut aluminum foil at four places, 90° from one another.

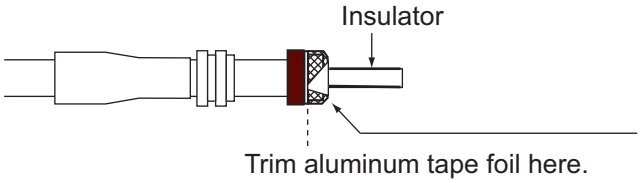

Fold back aluminum tape foil onto shield and trim.

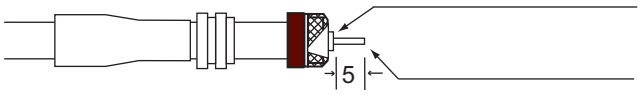

Expose the insulator by 1 mm.

Expose the core by 5 mm.

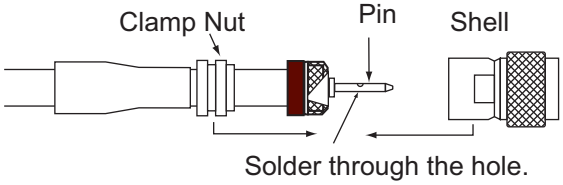

Slip the pin onto the conductor. Solder them together through the hole on the pin.

Insert the pin into the shell. Screw the clamp nut into the shell.
(Tighten by turning the clamp nut. Do not tighten by turning the shell)

How to attach the connector N-P-8DSFA for cable 8D-FB-CV

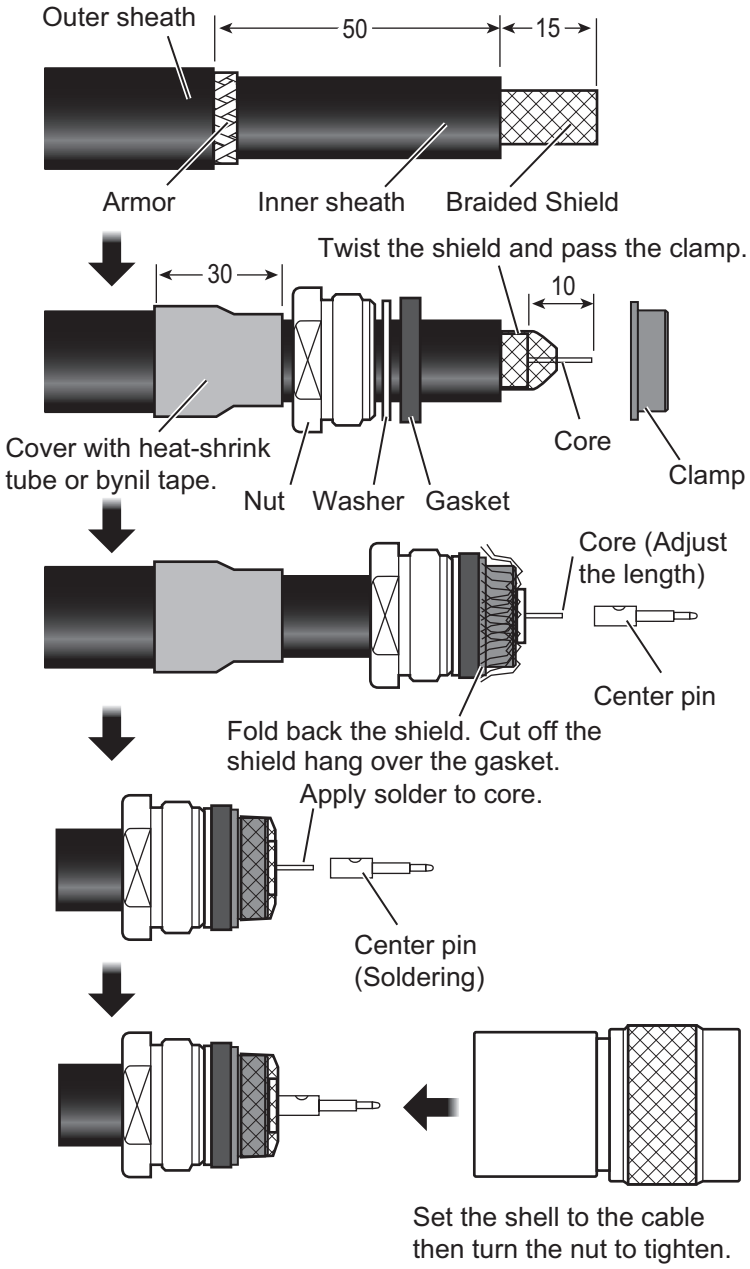

1.5 GPS/VHF Combined Antenna

Install the combined antenna unit referring to the outline drawing. When selecting a mounting location for the antenna, keep in mind the following points.

- Select a location out of the radar beam. The radar beam will obstruct or prevent reception of the GPS satellite signal.
- There should be no interfering object within the line-of-sight to the satellites. Objects within line-of-sight to a satellite, for example, a mast, may block reception or prolong acquisition time.
- Mount the antenna unit as high as possible. Mounting it this way keeps it free of interfering objects and water spray, which can interrupt reception of GPS satellite signal if the water freezes.

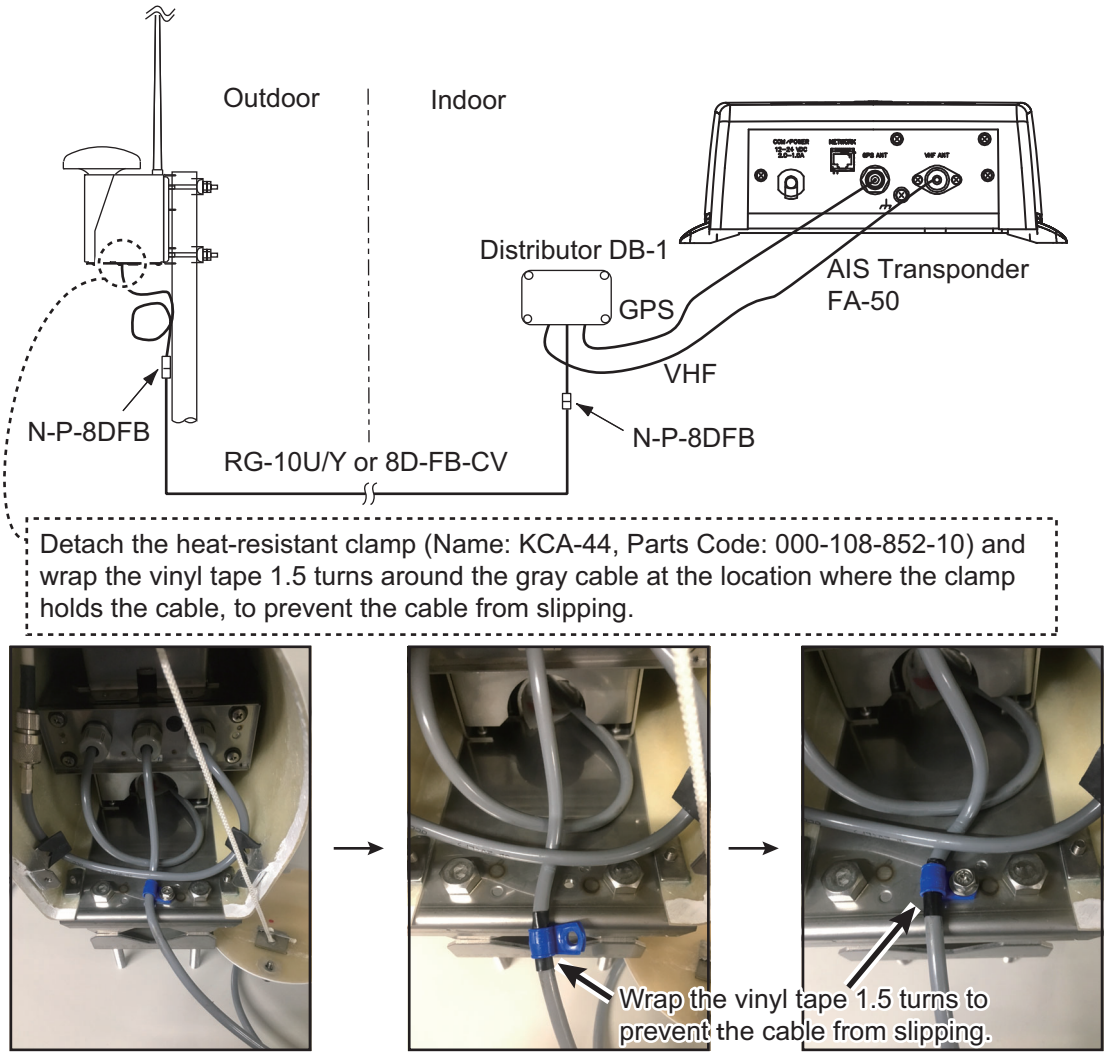

Installation overview of GPS/VHF combined antenna

Installing the VHF antenna CX4-3/FEC or FAB-151D to the combined antenna GVA-100-T

The compatibility of VHF antenna (CX4-3/FEC or FAB-151D) with the GVA-100-T differs with GVA-100-T's serial number.

Compatibility of CX4-3/FEC, FAB-151D and GVA-100-T

Serial No.	FAB-151D	CX4-3/FEC
000101 to 019999	OK	NG
020000 and after	OK	OK

To install the VHF antenna CX4-3/FEC or FAB-151D to the combined antenna GVA-100-T (with serial number 020000 and after), follow the below procedures.

1. Unfasten the upset head bolts (M3, 4pcs.) at the back side of the GVA-100-T.

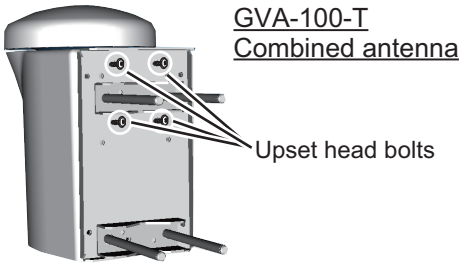

2. Turn the GVA-100-T upside-down, then unfasten three screws with captive washers (M3, 3pcs.) on the bottom cover to detach it.

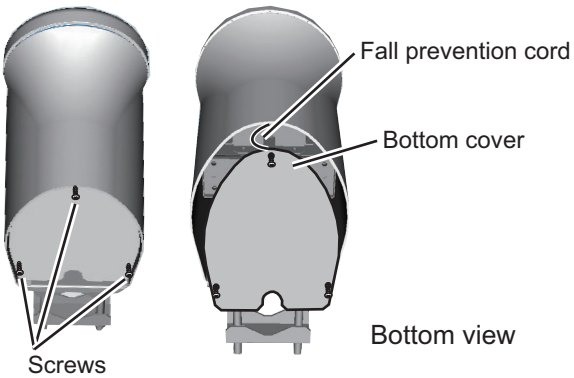

3. Remove the cushioning material from the connector of the cable to connect with VHF antenna CX4-3/FEC (MP-3D-360).

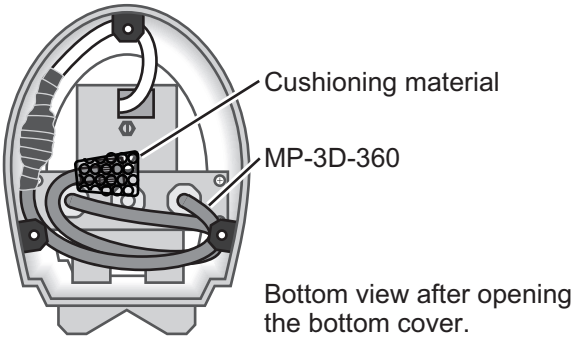

4. Insert the CX4-3/FEC to the GVA-100-T from the connector side.

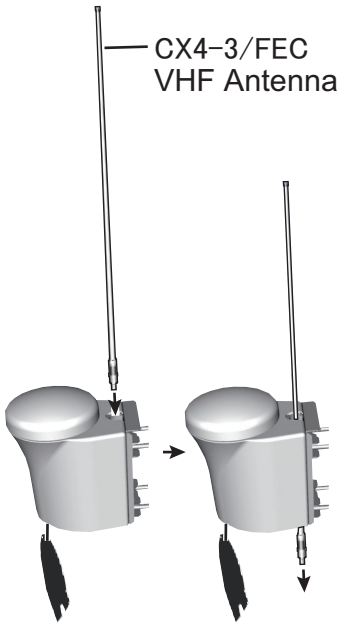

5. Connect the MP-3D-360 connector to the CX4-3/FEC and wrap the junction of the connectors with self-vulcanizing tape and vinyl tape. Apply adhesive to the connectors.

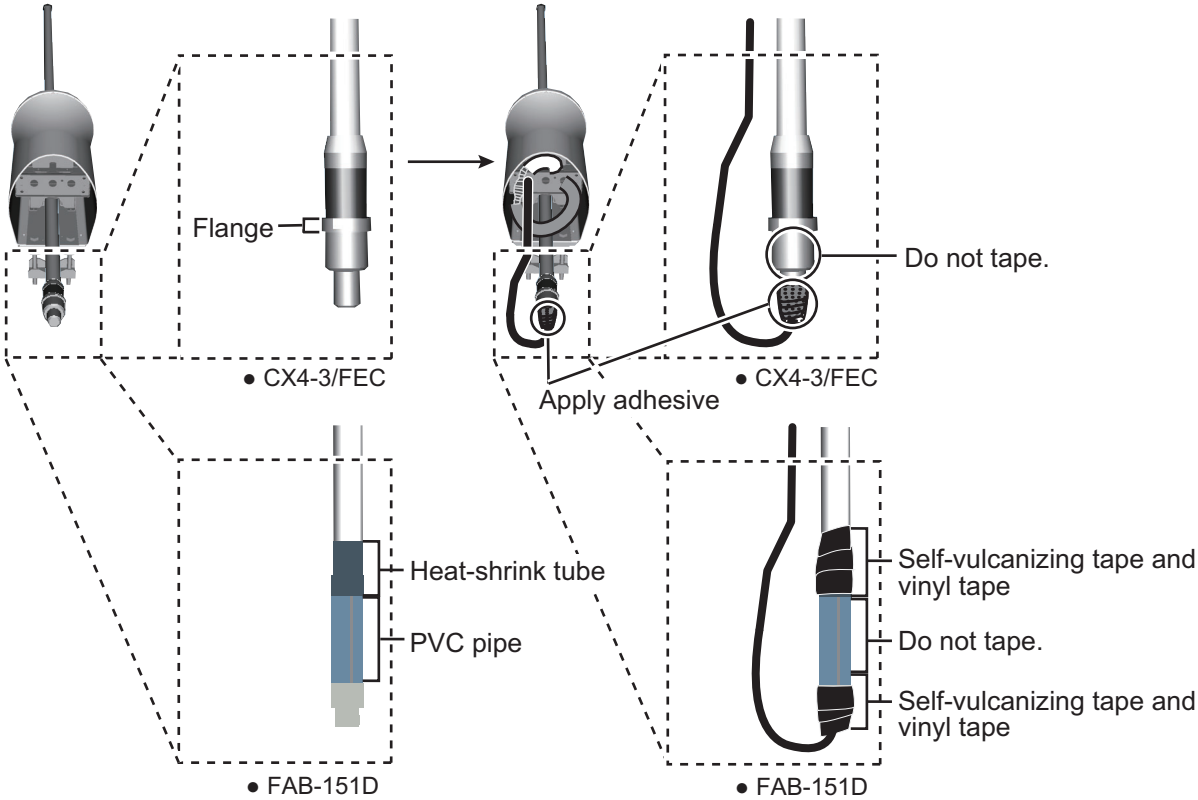

6. Raise the CX4-3/FEC or FAB-151D upward and tighten with the upset head bolts unfastened with step 1.

For CX4-3/FEC

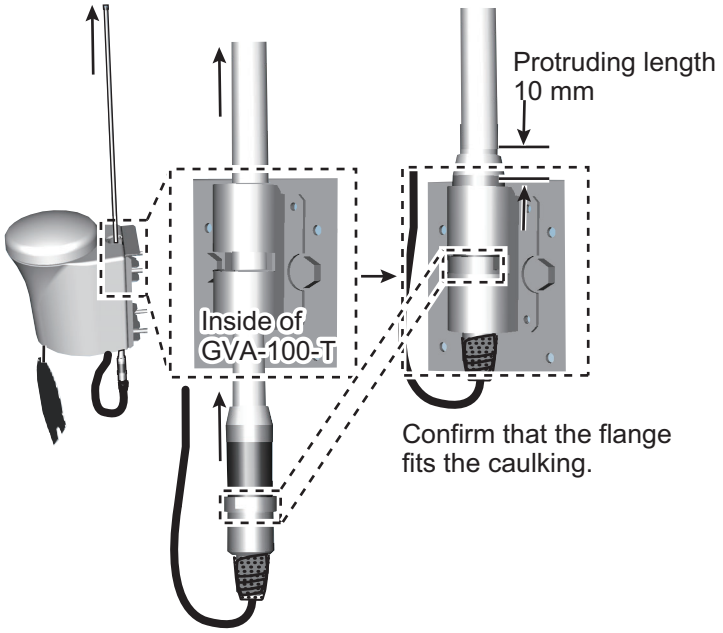

For FAB-151D

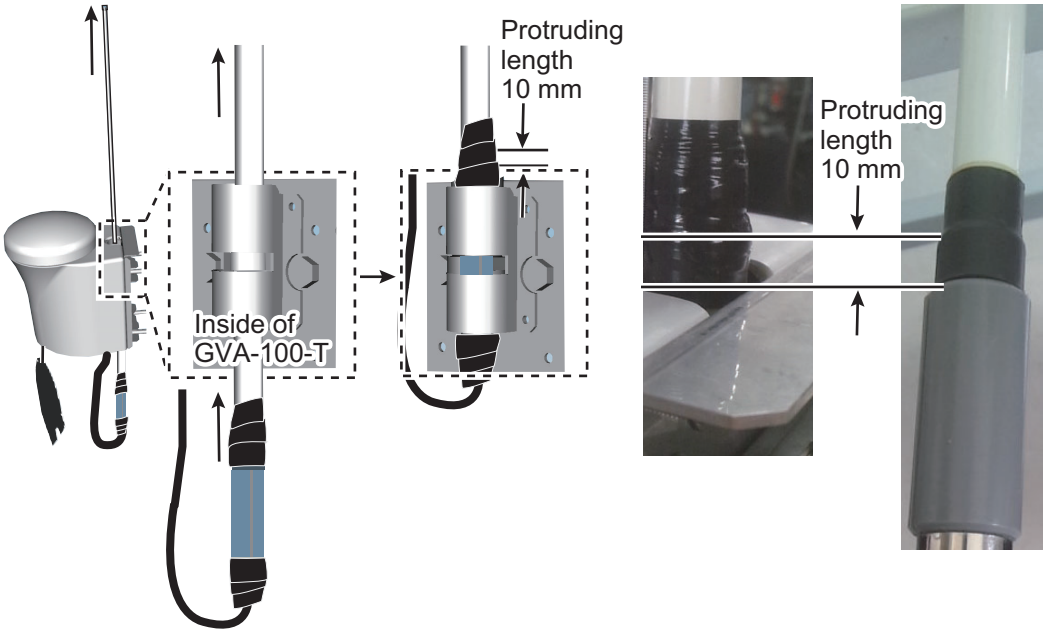

Correct installation | NG: PVC pipe can be seen. | NG: Taped part can not be seen.

7. Fasten the bottom cover to the GVA-100-T.

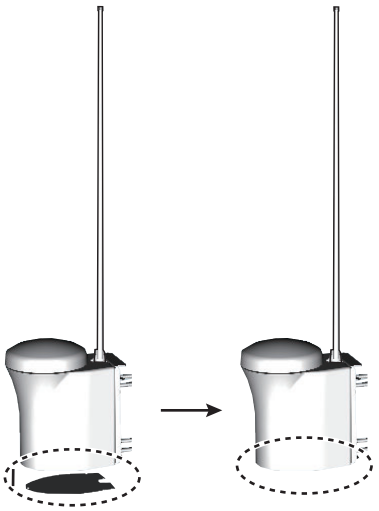

Mounting procedure

1. Dismount the bottom cover, cut the cable-tie inside the unit and take out the coaxial connector attached to the combined box.
2. Loosen four screws to loosen whip antenna fixture and pull out the coaxial connector coming from the combined box through the hole in the whip antenna fixture.
3. Connect the coaxial connector to the whip antenna base and wrap the junction part of the whip antenna with vulcanizing tape and then vinyl tape for waterproofing.
4. Insert the whip antenna from the top of the combined antenna.
5. Secure the whip antenna with whip antenna fixture.
6. Using a new plastic band (supplied), secure the cables and coaxial connector inside the antenna case.
7. Mount the bottom cover.
8. Fix the GPS/VHF combined antenna to the ship's stanchion (40 to 50 mm diameter) with antenna fixing brackets, flat washers and hex. nuts. For 60 to 80 mm diameter stanchion, the mast fixing kit (Type: OP24-5, Code No.: 005-954-510) is necessary.

Note: Coat the exposed parts of bolts and nuts with silicon sealant.

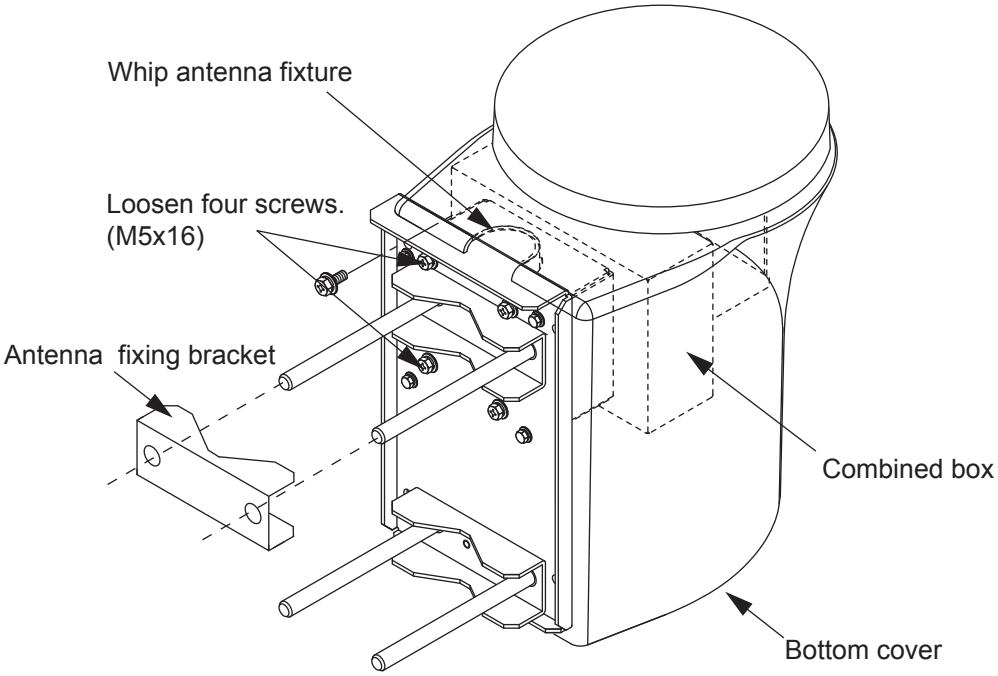

GPS/VHF combined antenna

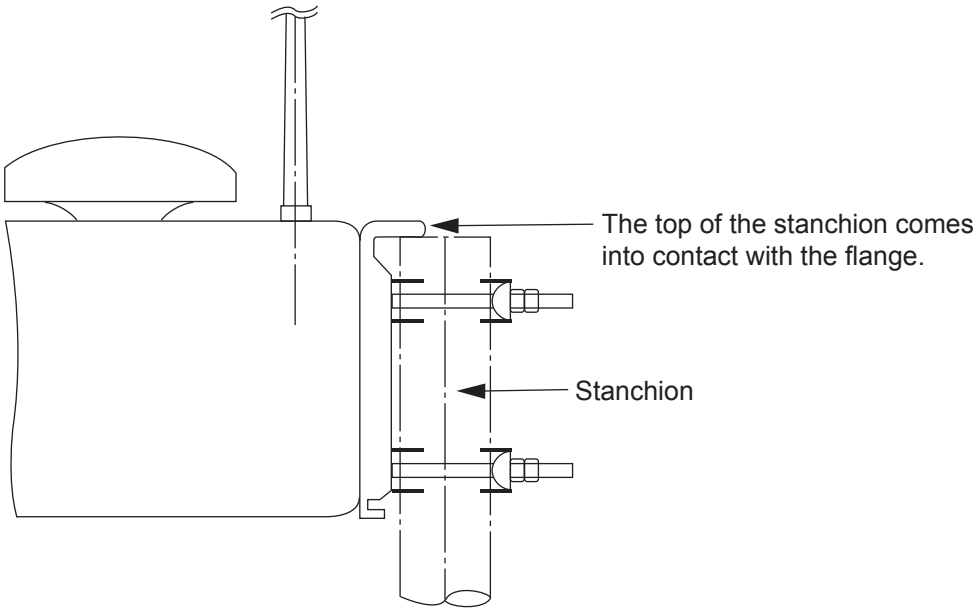

Installing distributor DB-1

The length of the cable between the distributor and transponder is 1 m so locate the distributor within 1 m from the transponder. Fix the distributor on the bulkhead, facing the cable entrance downward. Remove the lid of the distributor and secure the distributor with two self-tapping screws.

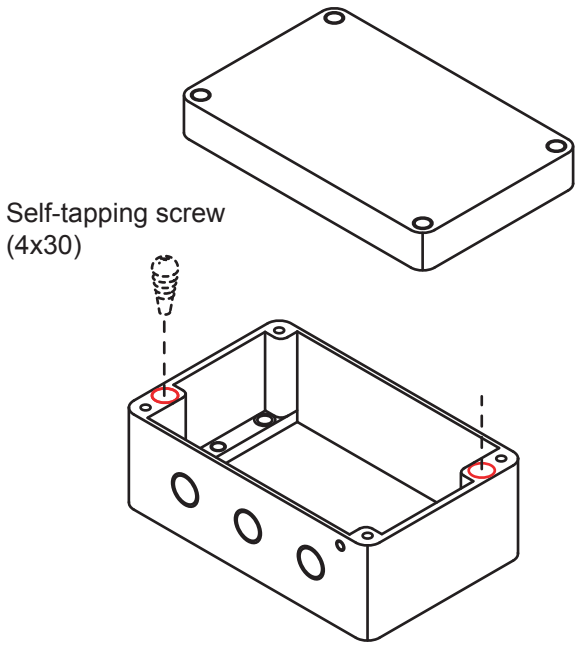

Note: Be sure no foreign material or water enters the distributor.

1.6 AC-DC Power Supply (option)

When selecting a mounting location for the unit, keep the following in mind:

- Keep the unit out away from areas subject to water splash.
- Locate the unit away from exhaust pipes and vents.
- The mounting location should be well ventilated.
- Mount the unit where shock and vibration are minimal.
- A magnetic compass will be affected if the unit is placed too close to it. Observe the following compass safe distances to prevent disturbance to the magnetic compass:
  - Steering compass: 0.6 m
  - Standard compass: 0.9 m

Fix the unit with four self-tapping screws (4x16) to a desktop or the deck. It is not necessary to open the cover.

1.7 Wiring

Connect power source, LAN cable, VHF antenna and ground wires as shown below.

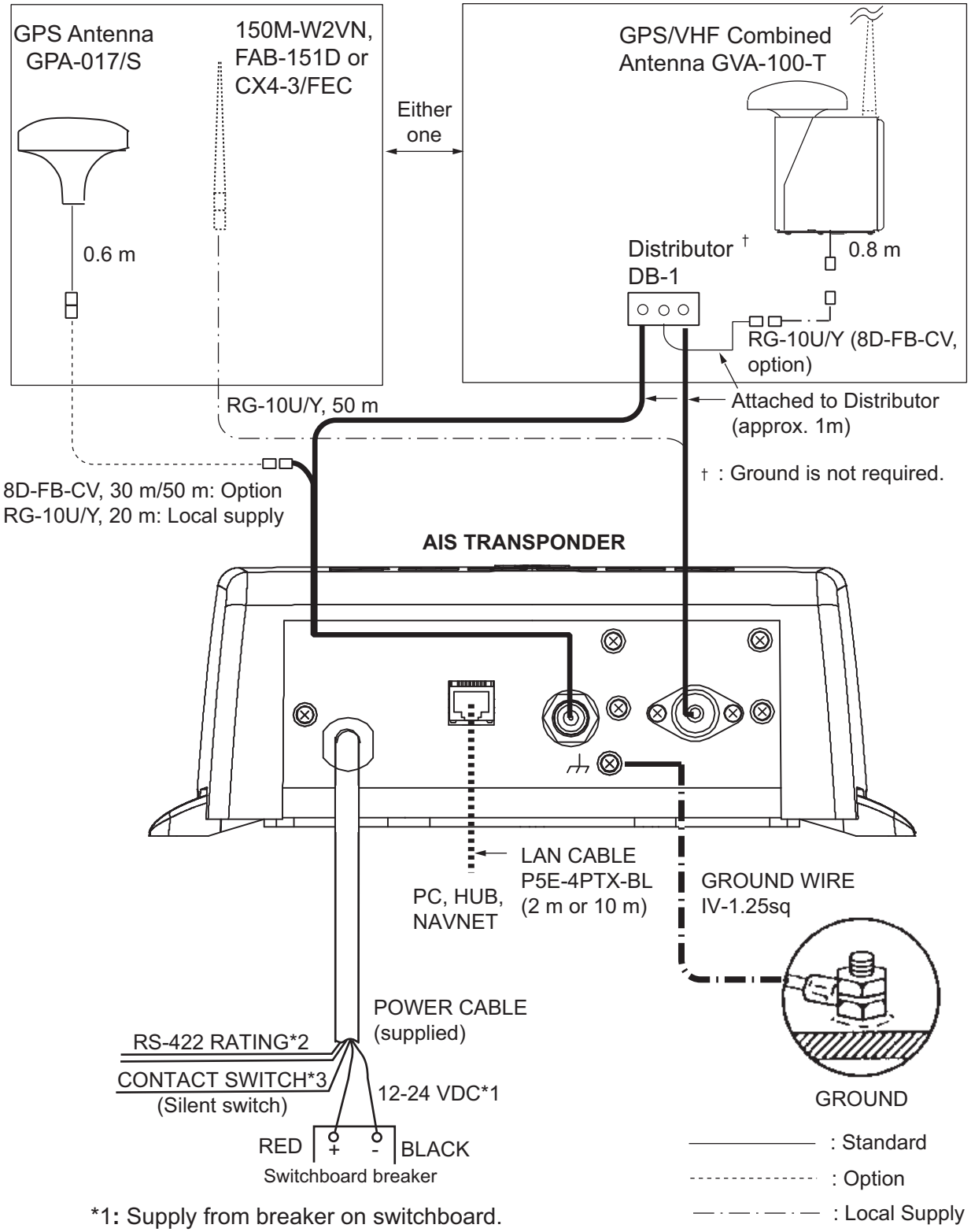

*1: Supply from breaker on switchboard.
*2: If COM lines (connection for NavNet, sensor) are not used, tape them to prevent short circuit.
*3: If CONTACT SWITCH line is not used, tape them to prevent short circuit.

Connection with the PC and NavNet vx2/3D

The FA-50 may be connected to a PC, or to both PC and NavNet vx2/3D. See the figure below for connection examples.

DIRECT CONNECTION

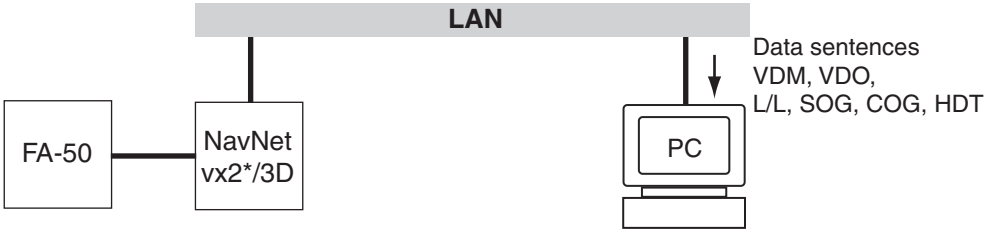

NavNet vx2/3D CONNECTION

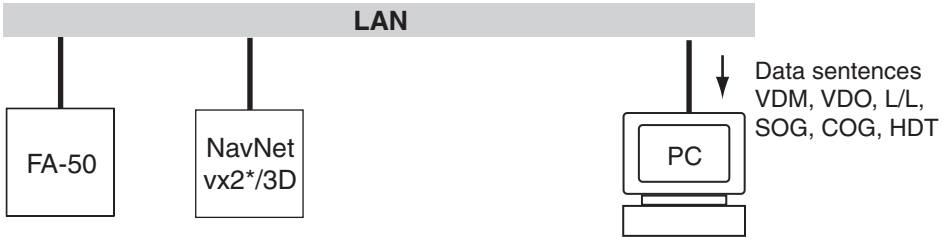

NavNet vx2/3D CONNECTION

*Required updating software.

1.8 Setting and Adjustments

After installing the equipment, set up the COM port, Network and own ship's static information (MMSI, ship's name, call sign, antenna position and type of ship). The FA-50 is set up from the PC or external display. The procedure below shows how to set up from a PC.

Note: Click Tools>Internet Options>Connections>LAN settings, and uncheck the "Use a proxy server for your LAN" before the setting.

1.8.1 COM PORT setup, Network sep

Note: Only one FA-50 may be connected to the network.

Start up

1. Start up the PC and enter IP address and subnet mask.
   (Windows® 2000 Windows®XP)
   1) Right-click [My Network] and left-click [Properties].
   2) Right-click [Local Area Network] and left-click [Properties].
   3) Select [Internet Protocol and Properties].
   4) Enter IP address 172.31.24.xxx (xxx=any three digits from 1 to 254, except 3).
   5) Enter subnet mask 255.255.0.0.

   (Windows Vista®)
   1) Right-click [Network] and left-click [Properties].
   2) Right-click [Manage network connections].
   3) Right-click [Local Area Connection] and left-click [Properties].
   4) Choose [Internet Protocol Version 4 (TCP/IPv4)] and left-click [Properties] button.
   5) Choose [Use the following IP address].
   6) Enter "172.31.24.xxx" in IP address. "xxx" should be 0 to 254 other than 3.
   7) Enter subnet mask 255.255.0.0.
   8) Left-click [OK] button.

   (Windows 7®)
   1) Right-click [Network] and left-click [Properties].
   2) Left-click [Change adapter options].
   3) Right-click [Local Area Connection] and left-click [Properties].
   4) Choose [Internet Protocol Version 4 (TCP/IPv4)] and left-click [Properties] button.
   5) Choose [Use the following IP address].
   6) Enter "172.31.24.xxx" in IP address. "xxx" should be 0 to 254 other than 3.
   7) Enter subnet mask 255.255.0.0.
   8) Left-click [OK] button.

(Windows 8®)

1) Show desktop.
2) Right-click [Network] and left-click [Properties].
3) Left-click [Change adapter options].
4) Right-click [Ethernet] and left-click [Properties].
5) Choose [Internet Protocol Version 4 (TCP/IPv4)] and left-click [Properties] button.
6) Choose [Use the following IP address].
7) Enter “172.31.24.xxx” in IP address. “xxx” should be 0 to 254 other than 3.
8) Enter subnet mask 255.255.0.0.
9) Left-click [OK] button.

(Windows 10®)

1) Left-click [setting] from the start menu.
2) Left-click [Network & Internet].
3) Left-click [Change adapter options].
4) Right-click [Ethernet] and left-click [Properties].
5) Choose [Internet Protocol Version 4 (TCP/IPv4)] and left-click [Properties] button.
6) Choose [Use the following IP address].
7) Enter “172.31.24.xxx” in IP address. “xxx” should be 0 to 254 other than 3.
8) Enter subnet mask 255.255.0.0.
9) Left-click [OK] button.

2. Open Internet Explorer and do the following:
   1) Click Tools on the menu bar.
   2) Click Internet Options.
   3) The General tab is selected. Click Settings at Temporary Internet Files.
   4) Click the radio button "Every visit to the page" at "Check for newer versions of stored page".
   5) Click the OK button.
   6) Click the OK button again.

3. Enter URL as http://172.31.24.3 and press the Enter key. This number is the default value of FA-50.

*1: Available when Ship Type is set for “8 Tanker(s)”.

*2: Available only for ships that are not required to carry a class B transponder.

4. Click Initial Setup to show the Initial Setup screen.

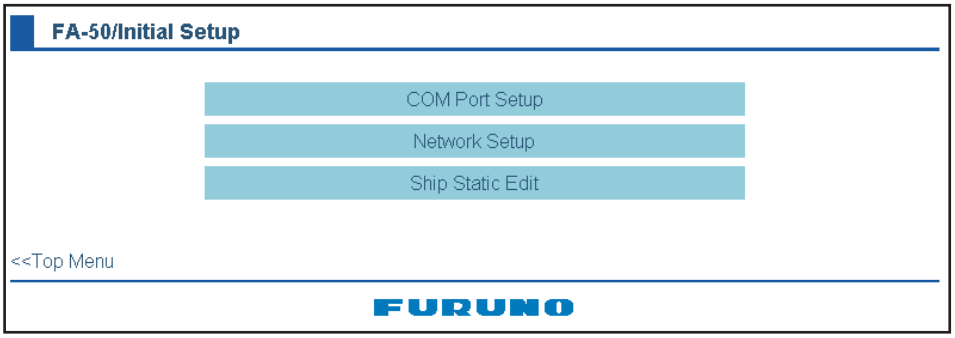

COM PORT setup

1. Click COM Port Setup to show the COM Port Setup screen.

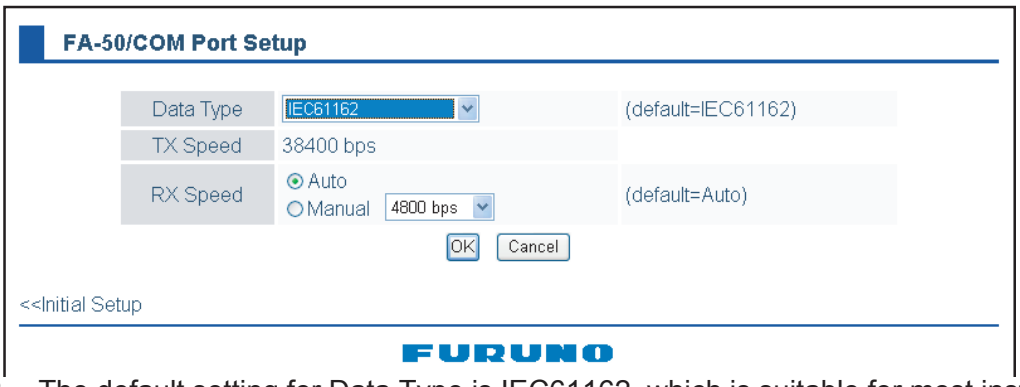

2. The default setting for Data Type is IEC61162, which is suitable for most installations. If change is necessary, click the Data Type drop-down list and choose data type as applicable, among the following choices.

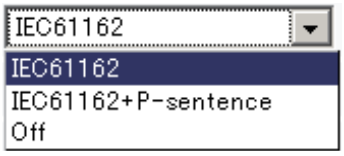

IEC61162: Transmit and receive IEC61162 format data via COM port. (P-sentences are received but not transmitted. P-sentence is FURUNO's original sentence.)
IEC61162+P-sentence: Transmit and receive IEC61162+P sentences format data via COM port.
Off: FA-50 transmits no data from COM port.

With the radio buttons at RX Speed, choose how RX speed is regulated, Auto or Manual. For manual, choose speed from the drop-down list.

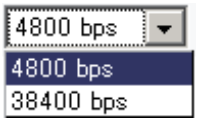

Note: Tx speed is fixed at 38400 bps.

3. Click OK to confirm setting.

NETWORK setup

If connected to a LAN (via NETWORK port), set the IP address for FA-50 as shown below.

1. Click Network Setup to show the Network Setup screen.

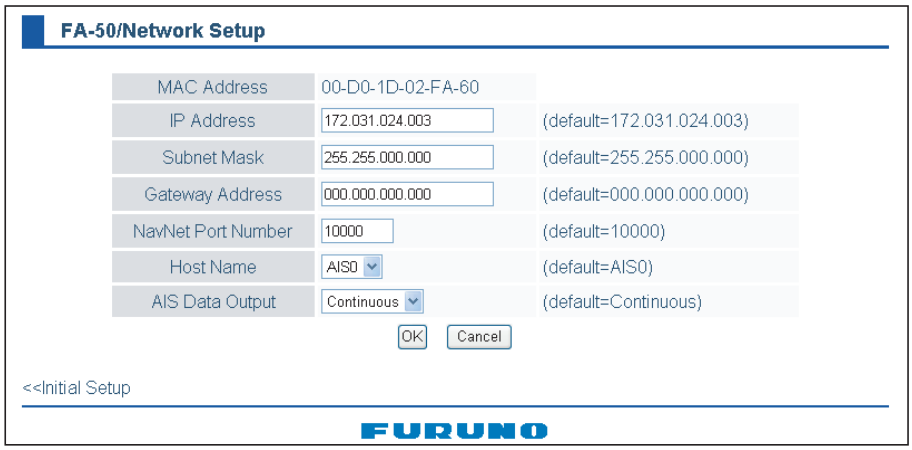

2. Enter the IP address assigned to the FA-50.
3. Enter subnet mask for the network.
4. Enter gateway address.
5. For NavNet connection, enter NavNet port number at NavNet Port Number. Enter ten-thousandths and one-thousandths places.
6. At Host Name, select host name to be used in NavNet, AIS0 - AIS9, from the window.
7. At Host Name, enter host name to be used in NavNet, AIS0 - AIS9.
   Auto: Auto-detect of where to output AIS data.
   Continuous AIS: Output AIS data continuously.
   Continuous GPS: Output GPS data (L/L, SOG, COG) continuously.
   Continuous ZDA: Output time data continuously.
   Continuous AIS/GPS: Output AIS/GPS data continuously.
   Continuous AIS/ZDA: Output AIS/time data continuously.

Continuous GPS/ZDA: Output GPS/time data continuously.
Continuous AIS/GPS/ZDA: Output AIS/GPS/time data continuously.

Note: It is not necessary to change the settings of NavNet Port Number, Host Name and AIS Data Output. Connection is available without adjusting them.

8. Click the OK button to finish.
   If you changed a setting, the message below appears.

> You must restart your FA-50
> before the new settings will take effect.
> Do you want to restart your FA-50 now?
> (It will take about 1 minute to restart your FA-50)

9. Click the Yes button to restart. ER LED on the FA-50 lights. After the LED goes off access is given.
10. The message "Please close the window." appears. Close the browser.

    After restart is completed, it is necessary to access the FA-50 using new values. For example, if you changed the IP address, use the new address to access the FA-50.

1.8.2 Ship static

Set the static data as below to use the transponder function.

1. On the Initial Setup menu, click Ship Static Edit to show the Ship Static Edit menu.

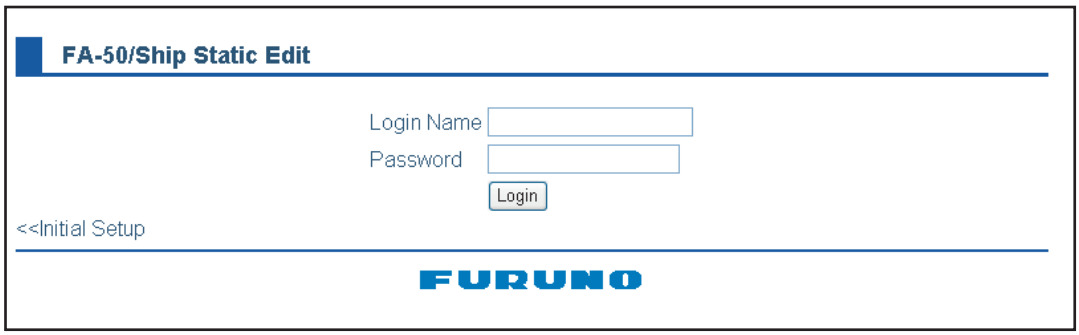

2. Enter the Login Name and Password. The Ship Static Edit screen appears. Note that the password is known by only the FURUNO dealer.

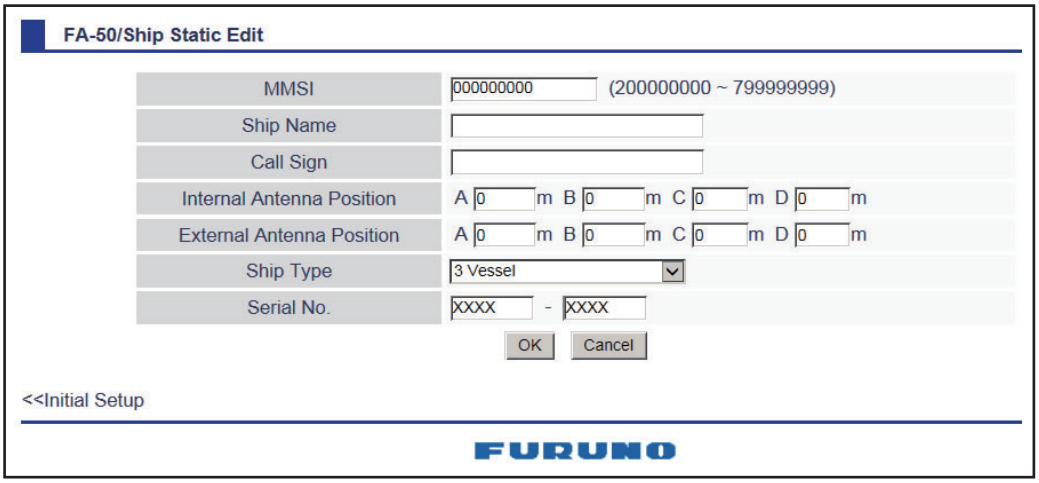

3. Enter ship's MMSI (Maritime Mobile Service Identity) in nine digits.
4. Enter ship's name, using up to 20 alphanumeric characters.
5. Enter call sign, using seven alphanumeric characters.
6. Set Internal/External antenna positions as follows:
   1) Enter distance for location “A” of FA-50 GPS antenna.
      A: Distance from bow to GPS antenna position, setting range: 0-511 m
   2) Enter distance for location B, C and D similar to how you did for “A” above.
      B: Distance from stern to GPS antenna position, setting range: 0-511 m
      C: Distance from port to GPS antenna position, setting range: 0-63 m
      D: Distance from starboard to GPS antenna position, setting range: 0-63 m

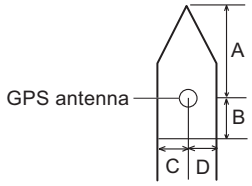

   3) Enter distance for location of an external GPS antenna (if connected) similar to how you did for the internal GPS antenna.
7. Click the down-allow button for Ship Type to show the operation window, and then choose a ship type. (WIG: Wing in ground, HSC: High speed craft)

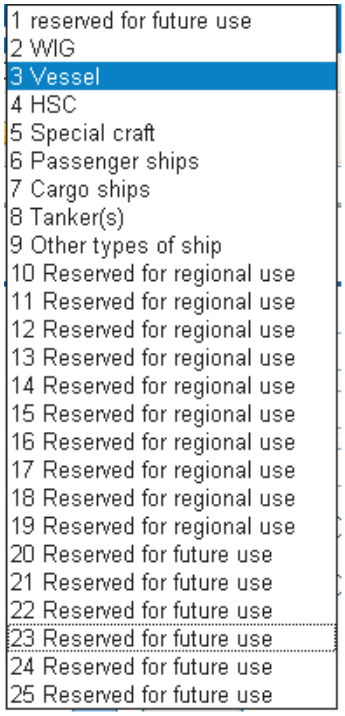

10 to 19: Reserved for regional use
1, 20 to 25: Reserved for future use

8. After finishing all settings, click the OK button.

2. OPERATION

2.1 AIS Transponder FA-50

The FA-50 has no power switch. Power is fed from the ship's switchboard, and a power switch on the switchboard turns the FA-50 on or off. When powered, the PWR LED (green) on the cover lights. The three other LEDs on the cover blink or light with equipment state. The ER LED (red) lights while the equipment is being initialized, and blinks when equipment error is found. The RX LED (orange) lights when receiving.The TX LED lights in blue when transmitting, and blinks in orange when TX time out occurs.

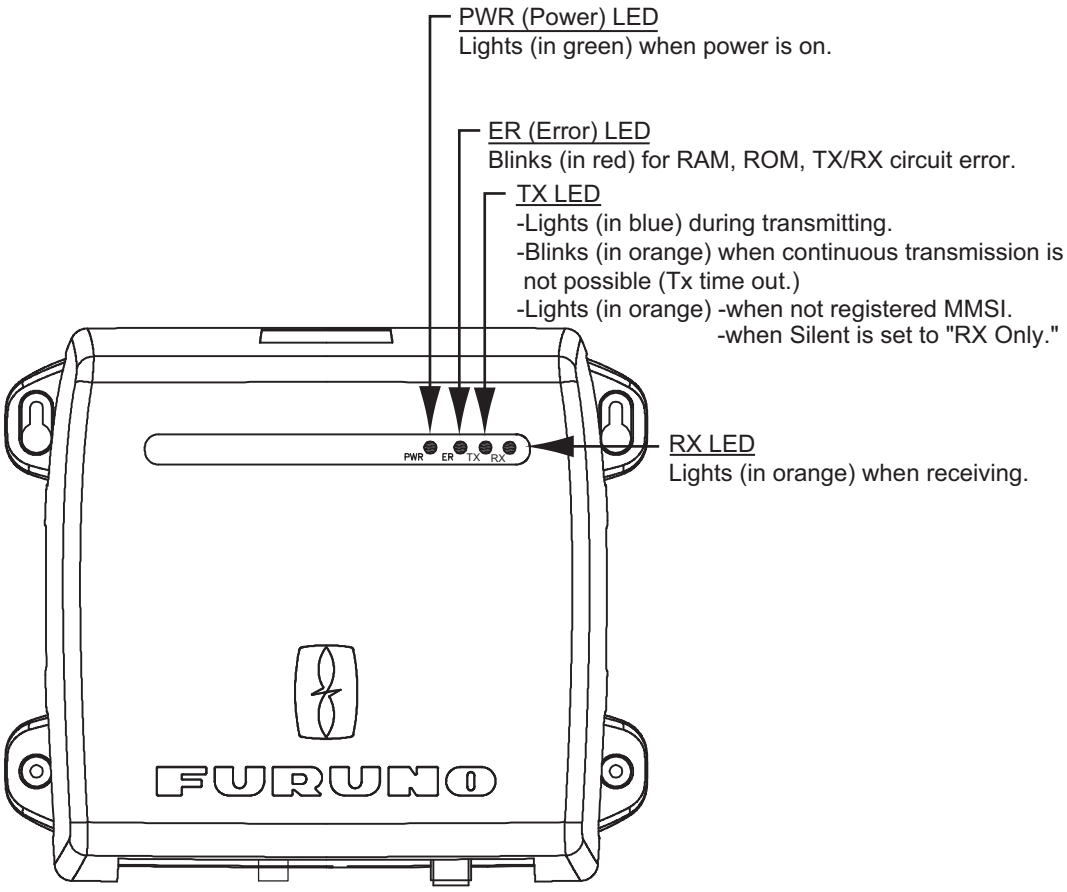

Receiving messages

You may receive messages via the VHF link to a specified destination (MMSI) or all ships in the area.

The contents of the message may be viewed on the received message log.

2.2 RX Message Log

You can confirm the received messages on the RX Message Log screen. Click RX Message Log on the main menu.

Click Detail to show the full message.

FA-50/RX Message Log

page(2/2)>>

No	Date	Time	MSG	CH	MMSI	Text		Flag
1	26/OCT/2011	03:58	14	A	889999988	TURN RIGHT	Detail	Read
2	26/OCT/2011	03:58	14	B	889999988	TURN RIGHT	Detail	Read
3	26/OCT/2011	03:58	12	B	889999988	TURN RIGHT	Detail	Read
4	26/OCT/2011	03:57	8	A	889999988	TURN RIGHT	Detail	Read
5	26/OCT/2011	03:54	8	B	889999988	ANCHOR	Detail	Read
6	26/OCT/2011	03:54	8	A	889999988	ANCHOR	Detail	Not Read
7	26/OCT/2011	03:54	8	B	999999999	ANCHOR	Detail	Read
8	26/OCT/2011	03:53	8	A	999999999	ANCHOR	Detail	Read
9	26/OCT/2011	03:53	12	B	999999999	ANCHOR	Detail	Not Read
10	26/OCT/2011	03:52	14	A	999999999	ANCHOR	Detail	Not Read

Message | 8 = Broadcast Normal | 12 = Addressed Safety | 14 = Broadcast Safety

<<Top Menu

FURUNO

Message category:

- Message 8: Received routine messages
- Message 12: Received safety messages from specific party
- Message 14: Received safety messages

To change the page, click <<Page (x/x). Flag field shows Read or “Not Read” for each message received.

2.3 Own Vessel Data Display

The Own Vessel Data display shows your ship's various data.

1. Show the main menu.
2. Click Own Vessel Data.

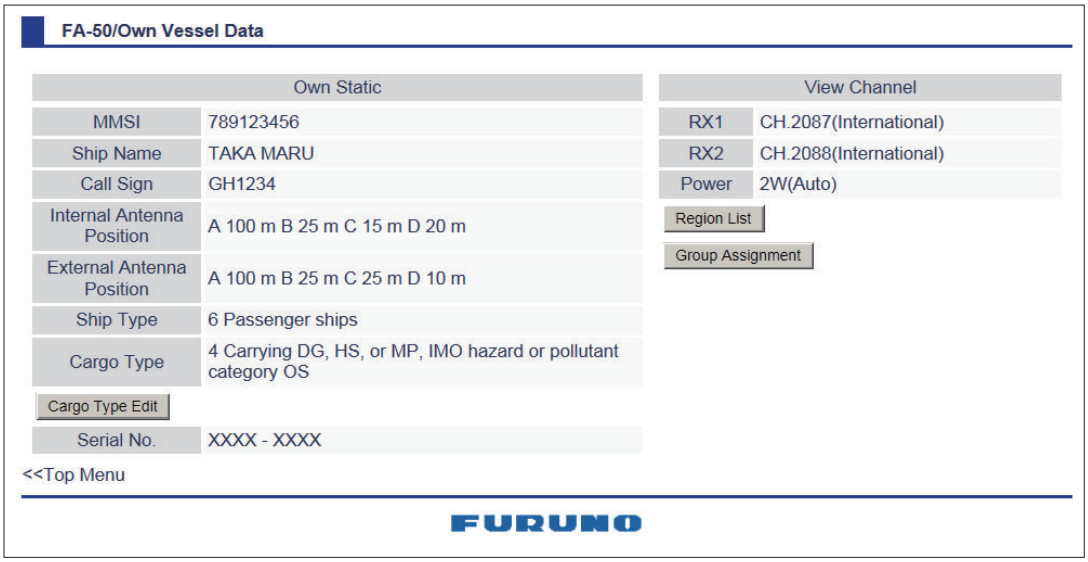

MMSI: Nine-digit number
Ship Name: 20 characters, max
Call sign: 7 characters, max.
Internal/External Antenna Position: Shows GPS and external GPS antenna positions.
Ship Type
Cargo Type
Serial No.
RX1: Channel (four digits) received over RX1. Channel type (International, Local) is shown in parentheses.
RX2: Channel (four digits) received over RX2. Channel type (International, Local) is shown in parentheses.
Power: Shows the power (2W)

3. Cargo Type can be selected as below.

4. Choose a type, and then click the OK button.

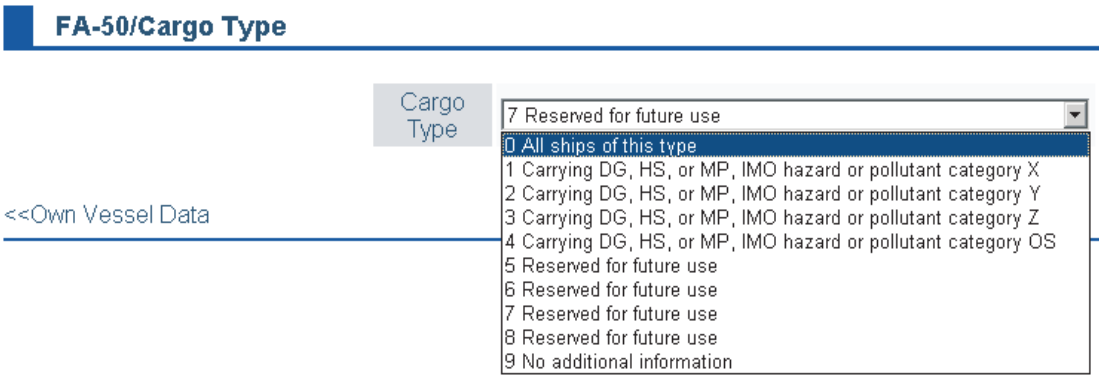

5. Click the Cargo Type Edit button to show the Cargo Type screen.
6. Select a Cargo Type from the drop down list and click OK.
7. Click Region List button to show the local sea area.Clicking the Detail button shows the detailed information of the region.

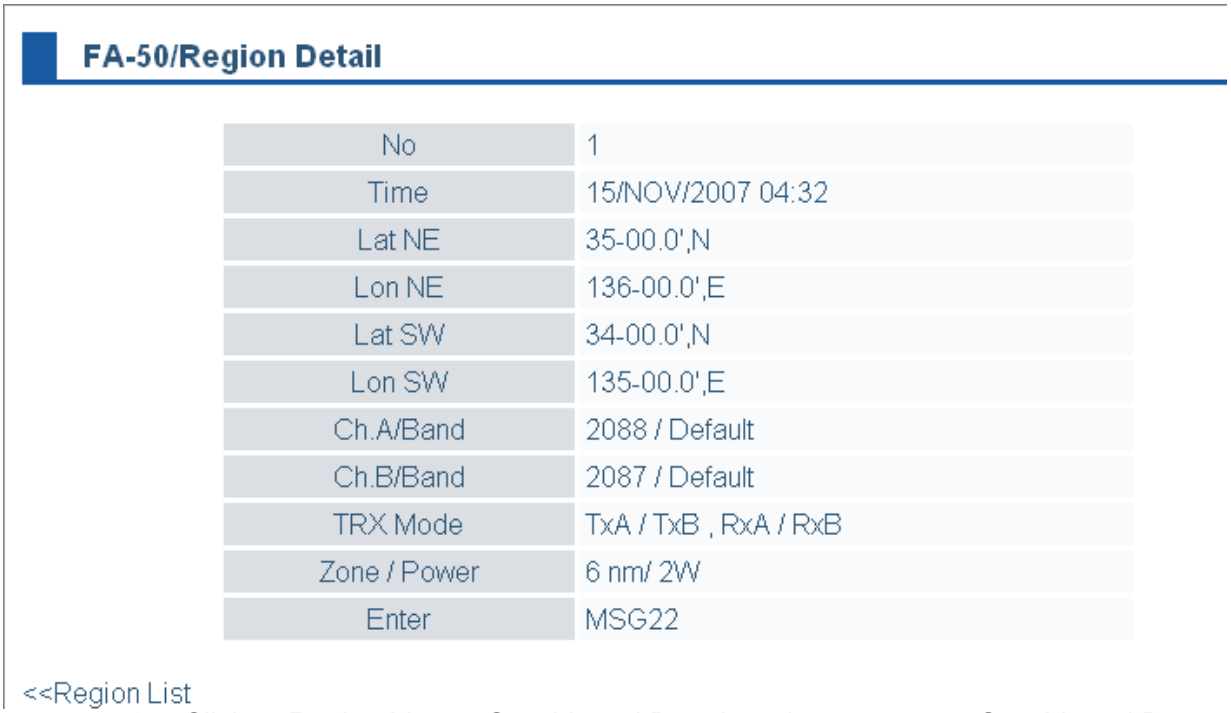

8. Click <<Region List, <<Own Vessel Data in order to return to Own Vessel Data window.

9. Click the Group Assignment button to show the Group Assignment window. This window shows the following list when receiving a group assignment message via VHF, own ship is cruising in the area specified on the message.

FA-50/Group Assignment

Assigned Mode	
Last Time	7 min
Lat NE	35-00.0000',N
Lon NE	136-00.0000',E
Lat SW	34-00.0000',N
Lon SW	135-00.0000',E
Report Interval	5 sec
TRX Mode	TxA / TxB , RxA / RxB

Quiet Mode	
Last Time	3 min
Lat NE	35-00.0000',N
Lon NE	136-00.0000',E
Lat SW	34-00.0000',N
Lon SW	135-00.0000',E

:Own Vessel Data

FURUNO

Assigned mode: Own ship's data is sent automatically with the designated interval in the specified area.
Quite mode: Transmission is not available in the specified area.

10. Click <<Own Vessel Data, <<Top Menu to go back to the top menu.

2.4 Alarm Status

The alarm status log shows alarms violated. Click “Alarm Status” on the top menu to show the alarm status log.

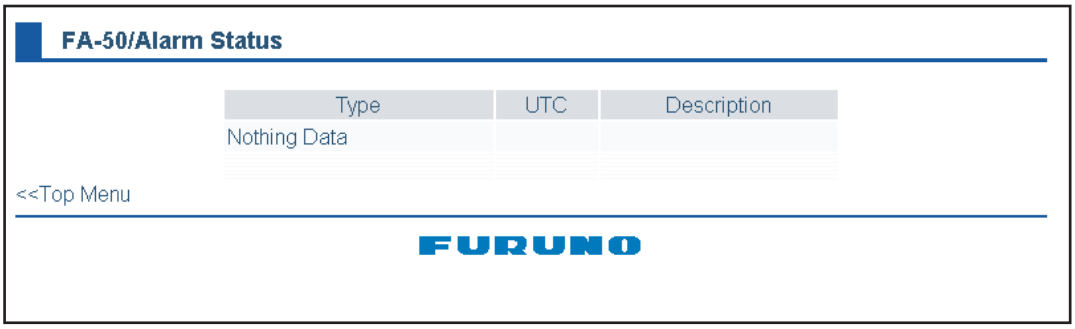

Alarm Status Indication	Meaning
TX	TX malfunction (and Error LED lights.)
RX1	TDMA RX1 Board trouble. TX stopped on corresponding TX channel.
RX2	TDMA RX2 Board trouble. TX stopped on corresponding TX channel.
COG	Invalid COG data.
EPFS	No data from external navigator. Continued operation possible.
HDG	Invalid/nonexistent HDG data
L/L	No L/L data
SOG	Invalid SOG data

2.5 Sensor Status

The sensor status display provides information about sensors connected to the FA-50.

1. Show Top Menu.
2. Click Sensor Status.

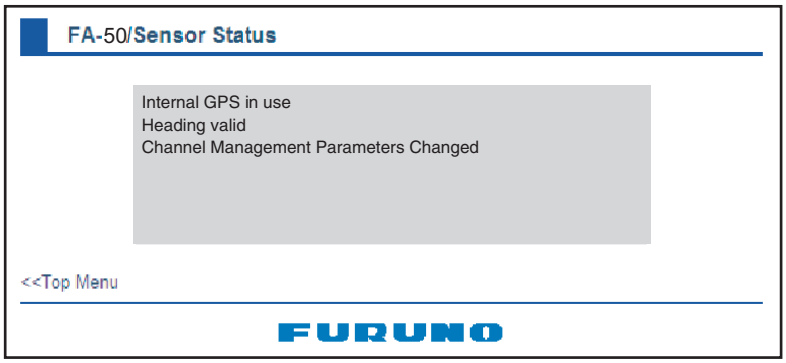

Indication	Meaning	Remarks
DGPS in use (Internal/External)	DGPS currently in use	See *1. .
GPS in use (Internal/External)	GPS currently in use	
SOG/COG in use (Internal/External)	SOG/COG currently in use	
Heading valid	Valid heading data	
Channel Management Parameters Changed	Channel parameters have been changed.	See *2.

*1: Whichever navigator is in use.
*2: Displayed for 30 seconds after changing channel parameters.

2.6 TX Power

You can select the TX Power when Ship type is set for “8 Tanker(s)“.

1. Show top menu.
2. Click TX Power.

3. Click the TX Power drop-down list and select the TX Power.
   The TX Power of “Normal“ is 2 W.
4. Click the OK button.

2.7 Silent

You can set your AIS transponder for receiving function only with the external silent switch (local supply, see section 1.7section 1.7). To confirm the current setting, do the following:

1. Show top menu.
2. Click Silent to show the Silent screen.
3. Confirm that the current setting, “Normal (both of TX and RX)” or “RX Only”.

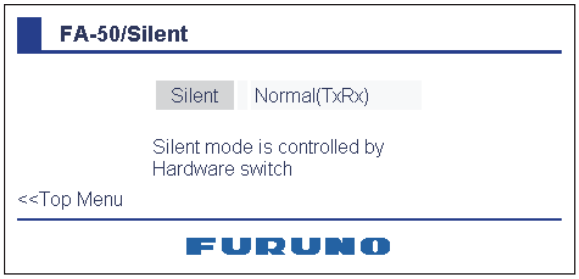

Silent screen (Normal)

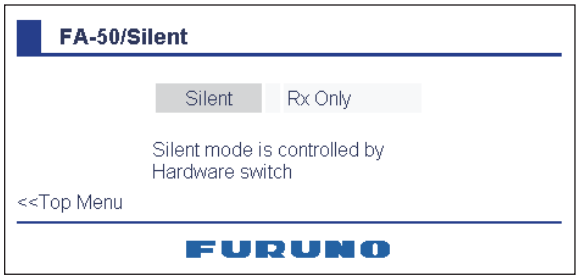

Silent screen (RX Only)

Note: This mode is available only for ships that are not required to carry a class B transponder.

3. MAINTENANCE, TROUBLESHOOTING

⚠ WARNING

Do not open the shield cover unless totally familiar with electrical circuits and service manual.

Only qualified personnel should work inside the equipment.

NOTICE

Do not apply paint, anti-corrosive sealant or contact spray to coating or plastic parts of the equipment.

Those items contain organic solvents that can damage coating and plastic parts, especially plastic connectors.

3.1 Maintenance

Regular maintenance helps good performance. Check the items listed below monthly to keep your equipment in good working order.

Item	Check point, remedy
Wiring	Check that each cable and wire are securely fastened. Refasten if necessary.
Ground	Check grounding for rust. Clean if necessary.
Antenna	Check antenna and its cabling for damage. Replace if necessary.
Cabinet	Dust and dirt should be removed from the cabinet with a soft, dry cloth. Do not use chemical-based cleaners; they can remove paint and markings.

3.2 Replacing the Fuse

The fuse (4A) inside the FA-50 protects it from overcurrent and equipment fault. If the unit cannot be powered, that is, the PWR (power) LED is off, the fuse may have blown. If this happens, turn off the power to the FA-50, open the body cover and check the fuse. If the fuse has blown, find out the reason before replacing it. If it blows again after replacement, contact a FURUNO agent or dealer for advice.

Part	Type	Code No.
Fuse (4A)	FGMB-A 125V 4A PBF	000-157-482-10

⚠ WARNING

Use the proper fuse.

Use of a wrong fuse can result in damage to the equipment and cause fire.

3.3 Troubleshooting

The troubleshooting table below provides typical operating problems and the means to restore normal operation. If you cannot restore normal operation, do not open the shield cover; there are no user serviceable parts inside the transponder.

Symptom	Problem	Remedy
Transponder cannot be powered.	Fuse inside the transponder may have blown.	Replace the fuse.
Cannot transmit/receive	• VHF antenna cable connection may haveloosened. • Antenna or its cabling may be damaged. • Rx channel setting is wrong.	• Check if the cable is firmly connected. • Check the antenna and its cabling for damage. • Confirm the channel setting.
The message is sent to wrong ship.	Setting of transmission is not correct.	Confirm MMSI.
No position data	• GPS antenna may be damaged. • GPS antenna cable may be damaged.	• Change the GPS antenna. • Check if the cable is firmly fastened. If the cable has damage, change it.

3.4 Diagnostics

The built-in diagnostic facility displays program version no. and TX text, then checks RAM, ROM, RX channels and GPS antenna for proper operation.

1. Open Internet Explorer and display the main menu.
2. Click Tests to show the Tests display.

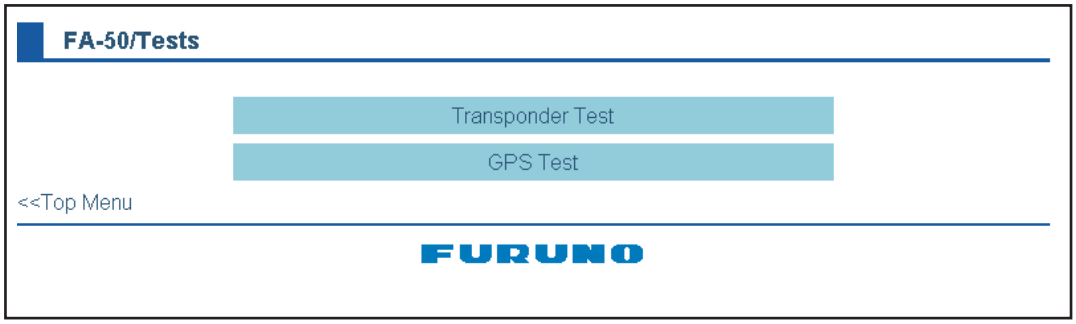

3. Click "Transponder Test" or "GPS Test" to show the appropriate test screen.
   Transponder Test: The program version number appears on the first line. The CPU1 RAM and CPU2 RAM, ROM and the two RX channels and TX are checked for proper operation, and the results are displayed as OK or NG (No Good). For any NG, try resetting the power and checking connections. If NG persists, contact your dealer for advice.
   GPS Test: The program version number appears on the first line. The ROM, RAM and connection with antenna (including power line), and the results are displayed as OK or NG (No Good). For any NG, try resetting the power and checking connections. If NG persists, contact your dealer for advice.

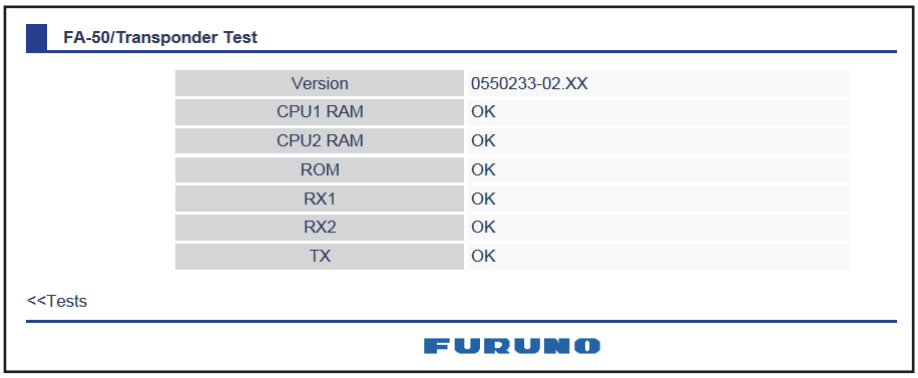

Transponder test

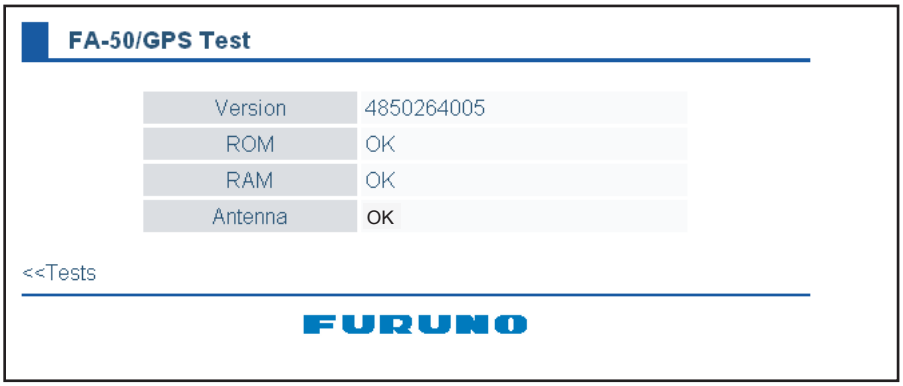

GPS test

3.5 List of Terms

The following table shows the terms used in FA-50.

Terms	Meaning
COM	Communication
TX	Transmit
RX	Receive
MMSI	Maritime Mobile Service Identity
AIS	Automatic Identification System
GPS	Global Positioning System
ZDA	Time and date

APPENDIX 1 MENU TREE

- Initial Setup
  - COM Port Setup
    - Data Type (IEC61162, IEC61162+P-sentence, Off)
    - TX Speed (38400 bps)
    - RX Speed (Auto, Manual (4800 bps, 38400 bps))
  - Network Setup
    - MAC Address
    - IP Address (172.031.024.003)
    - Subnet Mask (255.255.000.000)
    - Gateway Address (000.000.000.000)
    - NavNet Port Number (10000)
    - Host Name (AIS0-AIS9, AIS0)
    - AIS Data Output (Continuous, Auto)
  - Ship Static Edit (Required a password.)
- Own Vessel Data
  - Own Static (Cargo Type Edit) (MMSI, Ship Name, Call Sign, Internal Antenna Position, External Antenna Position, Ship Type, Cargo Type, Serial No.)
  - View Channel (Region List, Group Assignment) (RX1, RX2, Power)
- RX Message Log
- Alarm Status
- Sensor Status
- Tests
  - Transponder Test (Version, CPU1RAM, CPU2RAM, ROM, RX1, RX2, TX)
  - GPS Test (Version, ROM, RAM, Antenna)
- TX power*1
- Silent*2
- For Service (Required a password.)

*1: Available when Ship Type is set for "8 Tanker(s)".
*2: Available only for ships that are not required to carry a class B transponder.
bold: default

APPENDIX 2 VHF CHANNEL LISTS

USA mode

Ch No.	Frequency (MHz)	Ch No.	Frequency (MHz)
1001	156.05	1088	157.425
-	-	2001	160.65
1003	156.15	2002	160.7
-	-	2003	160.75
1005	156.25	2004	160.8
6	156.3	2005	160.85
1007	156.35	2007	160.95
1018	156.9	8	156.4
1019	156.95	9	156.45
1020	157	10	156.5
1021	157.05	11	156.6
1022	157.1	12	156.6
1023	157.15	13	156.65
1024	157.2	14	156.7
1025	157.25	15	156.75
1026	157.3	16	156.8
1027	157.35	17	156.85
1028	157.4	2018	161.5
-	-	2019	161.55
1061	156.07	2020	161.6
-	-	2021	161.65
1063	156.175	2022	161.7
1064	156.225	2023	161.75
1065	156.275	2024	161.8
1066	156.325	2025	161.85
67	156.375	2026	161.9
68	156.425	2027	161.95
69	156.475	2028	162
70	156.525	2060	160.625
71	156.575	2061	160.675
72	156.625	2062	160.725
73	156.675	2063	160.775
74	156.725	2064	160.825
75	156.775	2065	160.875
76	156.825	2066	160.925
77	156.875	2078	161.525
1078	156.925	2079	161.575
1079	156.975	2080	161.625
1080	157.025	2081	161.675
1081	157.075	2082	161.725
1082	157.125	2083	161.775
1083	157.175	2084	161.825
1084	157.225	2085	161.875

International mode

Ch No.	Frequency (MHz)	Ch No.	Frequency (MHz)
1001	156.05	1088	157.425
1002	156.1	2001	160.65
1003	156.15	2002	160.7
1004	156.2	2003	160.75
1005	156.25	2004	160.8
6	156.3	2005	160.85
1007	156.35	2007	160.95
1018	156.9	8	156.4
1019	156.95	9	156.45
1020	157	10	156.5
1021	157.05	11	156.55
1022	157.1	12	156.6
1023	157.15	13	156.65
1024	157.2	14	156.7
1025	157.25	15	156.75
1026	157.3	16	156.8
1027	157.35	17	156.85
1028	157.4	2018	161.5
1060	156.025	2019	161.55
1061	156.075	2020	161.6
1062	156.125	2021	161.65
1063	156.175	2022	161.7
1064	156.225	2023	161.75
1065	156.275	2024	161.8
1066	156.325	2025	161.85
67	156.375	2026	161.9
68	156.425	2027	161.95
69	156.475	2028	162
70	156.525	2060	160.625
71	156.575	2061	160.675
72	156.625	2062	160.675
73	156.675	2063	160.775
74	156.725	2064	160.825
75	156.775	2065	160.875
76	156.825	2066	160.925
77	156.875	2078	161.525
1078	156.925	2079	161.575
1079	156.975	2080	161.625
1080	157.025	2081	161.675
1081	157.075	2082	161.725
1082	157.125	2083	161.775
1083	157.175	2084	161.825
1084	157.225	2085	161.875
1085	157.275	2086	161.925
1086	157.325	2087	161.975
1087	157.375	2088	162.025

CH13, 67: operate on 1W.

APPENDIX 3 PARTS LIST, LOCATIONS

Parts lists

F U R U N O	Model	FA-50
	Unit	Tranponder
ELECTRICAL PARTS LIST		
	Blk.No.	

NAME	TYPE	CODE NO.
PRINTED CIRCUIT BOARD		
MAIN&TX	05P0814	001-034-470
POWER	05P0809	001-034-460
RX1	05P0808A	001-015-620
RX2	05P0808B	001-015-630
GPS TB	24P0043	005-955-290

Parts location

Transponder

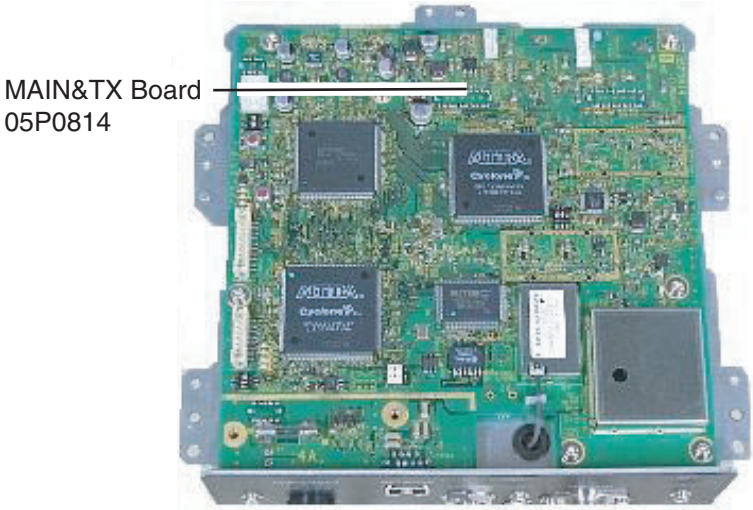

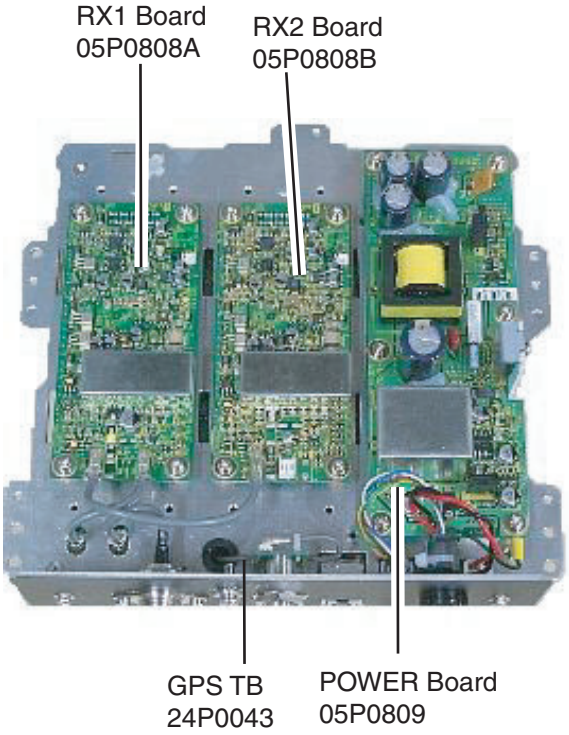

APPENDIX 4 DIGITAL INTERFACE

Sentence data

Input sentences
ACK, AIQ, BBM, DSC, DSE, DTM, GBS, GGA, GLL, GNS, HDT, OSD, RMC, SSD, THS, VBW, VSD, VTG

Output sentences
ABK, ACA, ACS, ALR, TXT, VDM, VDO

Transmission intervalABK: With each event
ACA, ACS: At RX/Switch information the region
ALR: 25 s during alarm, 2 min normally no alarm
TXT: Status is changed.VDM: At RX VHFVDO: 1 s

Load requirements as listener
Isolation: opto coupler
Input Impedance: 470 ohms
Max. Voltage: ±15 V
Threshold: 3 mA (In case of FURUNO device talker connection)

Output drive capability
Differential driver outputR=54 ohm, 1.1 V minR=60 ohm, 1.1 V minDriver short-circuit current: 250 mA max.Data transmissionData format and protocol are transmitted in serial asynchronous form in accordance with the stan-dard referenced in 2.1 of IEC 61162-1. The first bit is a start bit and is followed by data bits, least-significant-bit as illustrated below.

The following parameters are used:
Baud rate: 38.4 Kbps
Data bits: 8 (D7=0), parity none
Stop bits: 1

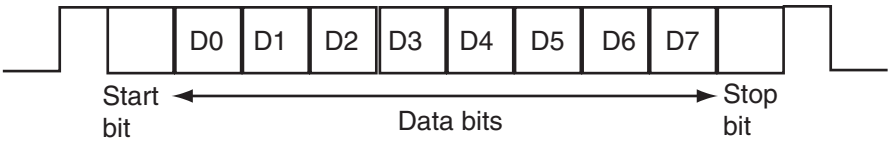

Serial interface I/O circuit

Input/Output Buffer

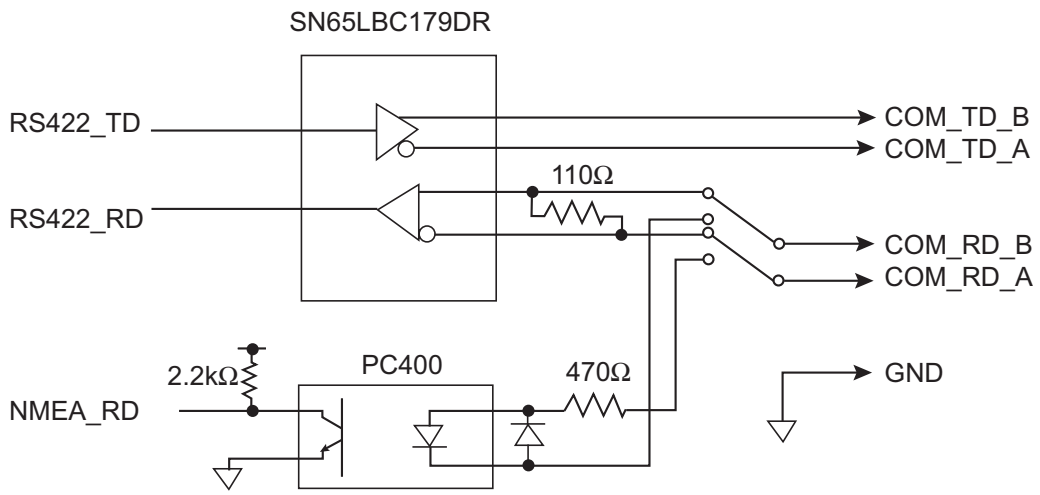

Sentence description

Input sentences

AIQ-AOIS query

```
$--AIQ,ccc,*hh<CR><LF>
        |   |
        |   |
        |   +------------------------ 2
        +-------------------------------- 1
```

1. Query data
2. Checksum

BBM-AIS broadcast binary message

```
!--BBM,x,x,x,x,x.x,s--s,x*hh<CR><LF>
        | | | |  |    |  |  |
        | | | |  |    |  |  +--- 8
        | | | |  |    |  +------- 7
        | | | |  |   +---------- 6
        | | | |  +-------------- 5
        | | |  +---------------- 4
        | |  +------------------ 3
        | +-------------------- 2
        +---------------------- 1
```

1. Total number of sentences needed to transfer the message, 1 to 9
2. Message sentence number, 1 to 9
3. Sequential Message identifier, 0 to 9
4. AIS channel for broadcast of the radio message
5. VDL message number(8 or 14), see ITU-R M.1371
6. Binary data
7. Number of fill-bits, 0 to 5
8. Checksum

DSC-Digital selective calling information

```
-DSC,xx,xxxxxxxxx,xx,xx,xx,x.x,xxxxxxxxxx,xx,a,a*hh<CR><LF>
      |    |        |  |  |  | |    |          |  | |
      |    |        |  |  |  | |    |          |  | +------- 11
      |    |        |  |  |  | |    |          |  +------- 10
      |    |        |  |  |  | |    |         +------- 9
      |    |        |  |  |  | |    +------- 8
      |    |        |  |  |  | +--------- 7
      |    |        |  |  |  +----------- 6
      |    |        |  |  +-------------- 5
      |    |        |  +----------------- 4
      |    |        +-------------------- 3
      |    +----------------------- 2
      +------------------------------ 1
```

1. Format Specifier
2. Address
3. Categry
4. Nature of Distress or First Telecommand
5. Type of Communication or Second Telecommand
6. Position
7. Time
8. MMSI of ship in distress
9. Nature of distress
10. Acknowledgement
11. Expansion indicator

DSE-Expanded digital selective calling

```
$--DSE,x,x,a,xxxxxxxxxx,xx,c--c,.......,xx,c--c*hh<CR><LF>
      | | |    |    | |   |    | |  |
      | | |    |    | |   |    | |  +------- 8
      | | |    |    | |   |    +--+----------- 7
      | | |    |    | |   +-------------------- 6
      | | |    |    +--+--------------------------- 5
      | | |    +------------------------------------ 4
      | | +------------------------------------------- 3
      | +-------------------------------------------- 2
      +---------------------------------------------- 1
```

1. Total number of messages
2. Message number
3. Query/reply flag
4. Vessel MMSI
5. Data set '1'
6. Additional data sets
7. Data set 'n'
8. Checksum

DTM-Datum referencew

```
$--DTM,ccc,a,x.x,a,x.x,a,x.x,ccc*hh<CR><LF>
        |   |   |   |   |   |   |   |    |
        |   |   |   |   |   |   |   |    +--- 7
        |   |   |   |   |   |   |   +------ 6
        |   |   |   |   |   |   +---------- 5
        |   |   |   |   +---+-------------- 4
        |   |   +---+-------------------- 3
        |   +------------------------- 2
        +-------------------------- 1
```

1. Local datum W84 - WGS84
   W72 - WGS72
   S85 - SGS85
   P90 - PE90
   999 - User defined
   IHO datum code
2. Not used
3. Lat offset, min, N/S
4. Lon offset, min, E/W
5. Not used
6. Reference dattum W84 - WGS84
   W72 - WGS72
   S85 - SGS85
   P90 - PE90
7. Checksum

GBS-GNSS satellite fault direction

```
$--GBS,hhmmss.ss,x.x,x.x,x.x,xx,x.x,x.x,x.x,h,h*hh<CR><LF>
```

1. Not used
2. Expected error in latitude
3. Expected error in longitude
4. Not used
5. Not used
6. Not used
7. Not used
8. Not used
9. GNSS System ID
10. GNSS Signal ID
11. Checksum

GGA-Global positioning system (GPS) fix data

```
$--GGA,hhmmss.ss,llll.ll,a,yyyyy.yy,a,x,xx,x.x,x.x,M,x.x,M,x.x,xxxx*hh<CR><LF>
```

1. Not used
2. Latitude, N/S
3. Longitude, E/W
4. GPS quality indicator
5. Not used
6. Not used
7. Not used
8. Not used
9. Not used
10. Not used
11. Checksum

GLL-Geographic position-latitude/longitude

```
$--GLL,llll.ll,a,yyyyy.yy,a,hhmmss.ss,A,a*hh<CR><LF>
```

1. Latitude, N/S
2. Longitude, E/W
3. Not used
4. Status: A=data valid, V=data invalid (See NOTE 1.)
5. Mode indicator (See NOTE 2.)
6. Checksum

NOTE 1: The Mode indicator field supplements the status field (field 6). The status field shoud be set to V = invalid for all values of operating mode except for A = Autonomous and D = Differential. The positioning system Mode indicator and status fields should not be null fields.

NOTE 2: Positioning system Mode indicator:

A = Autonomous
D = Differential
E = Estimated (dead reckoning)
M = Manual input
S = Simulator
N = Data not valid

GNS-GNSS fix data

```
$--GNS,hhmmss.ss,llll.ll,a,yyyyy.yy,a,c--c,xx,x.x,x.x,x.x,x.x,x.x,a*hh<CR><LF>
```

1. Not used
2. Latitude, N/S
3. Longitude, E/W
4. Mode indicator (See NOTE 2.)
5. Not used
6. Not used
7. Not used
8. Not used
9. Not used
10. Not used
11. Navigational Status Indicator (See NOTE 1.)
12. Checksum

NOTE 1: Mode indicator. A variable length valid character field type with the first three characters currently defined. The first character indicates the use of GPS satellites, the second character indicates the use of GLONASS satellites and the third indecates the use of Galileo satellites. If another satellite system is added to the standard, the Mode indicator will be extended to four characters. New satellite systems should always be added on the right, so the order of characters in the Mode indicator is: GPS, GLONASS, Galileo, other satellite systems in the future. The characters should take one of the following values:

A = Autonomous. Satellite system used in non-differntial mode in position fix
D = Differential. Satellite system used in differential mode in position fix
E = Estimated (dead reckoning) mode
F = Float RTK. Satellite system used in real time kinematic mode with floating integers
M = Manual input mode
N = No fix. Satellite system not used in position fix, or fix not valid
P = Precise. Satellite system used in precision mode. Precision mode is defined as: no deliberate degradation (such as selective availability) and higher resolution code (P-code) is used to compute position fix. P is also used for satellite system used in multi-frequency, SBAS or Precise Point Positioning (PPP) mode.
R = Real Time Kinematic. Satellite system used in RTK mode with fixed integers
S = Simulator mode

The Mode indicator should not be a null field.

NOTE 2: The navigational status indicator is according to IEC 61108 requirements on ‘Navigational (or Failure) warnings and status indications’. This field shoule not be a NULL field and the character should take one of the following values:

S = Safe — When the estimated positoning accuracy (95 % confidence) is within the selected accuracy level corresponding to the actual navigation mode, and integrity is available and within the requirements for the actual navigation mode, and a new valid position has been calculated within 1 s for a conventional craft and 0.5 s for a high speed craft.

C = Caution — When integrity is not available

U = Unsafe — When the estimated positioning accuracy (95 % confidence) is less than the selected accuracy level corresponding to the actual navigation mode, and/or integrity is available but exceeds the requirements for the actual navigation mode, and/or a new valid position has not been calculated within 1 s for a conventional craft and 0.5 s for a high speed craft.

V = Navigational status not valid, equipment is not providing navigational status indication.

HDT-Heading true

```
$--HDT,x.x,T*hh<CR><LF>
        |   | |
        |   | +------ 2
        +---+-------- 1
```

1. Heading, degrees true
2. Checksum

OSD-Own ship data

```
$--OSD,x.x,A,x.x,a,x.x,a,x.x,x.x,a*hh<CR><LF>
        | | | | | | | | | |
        | | | | | | | | |  +---------- 10
        | | | | | | | | |  +----------- 9
        | | | | | | | |  +--------------- 8
        | | | | | | |  +------------------ 7
        | | | | | +--------------------- 6
        | | | | +------------------------ 5
        | | | +--------------------------- 4
        | | +----------------------------- 3
        | +------------------------------- 2
        +---------------------------------- 1
```

1. Heading, degrees true
2. Heading status: A=data valid, V=data invalid
3. Vessel course, degrees true
4. Course reference, B/M/W/R/P(see NOTE)
5. Vessel speed
6. Speed reference, B/M/W/R/P(see NOTE)
7. Not used
8. Not used
9. Speed units, K(km/h) / N(Knots) / S(statute miles/h)
10. Checksum

NOTES - Reference systems(speed/course):

B = bottom tracking log
M = manually entered
W = water referenced
R = radar tracking(of fixed target)
P = positioning system ground reference

RMC-Recommended minimum specific GNSS data

```
$--RMC,hhmmss.ss,A,llll.ll,a,yyyyy.yy,a,x.x,x.x,xxxxxx,x.x,a,a,a*hh<CR><LF>
       |         |   |    |         |    |  |   |      |        |  | | |  |
       |         |   |    |         |    |  |   |      |        |  | | |  +--- 10
       |         |   |    |         |    |  |   |      |        |  | | +------- 9
       |         |   |    |         |    |  |   |      |        |  | +--------- 8
       |         |   |    |         |    |  |   |      +-------+-+----------- 7
       |         |   |    |         |    |  |   |
       |         |   |    |         |    |  |   +---------------------------- 6
       |         |   |    |         |    |  +-------------------------------- 5
       |         |   |    |        +---+------------------------------------ 4
       |         |   +---+------------------------------------------------- 3
       |        +------------------------------------------------------------ 2
      +--------------------------------------------------------------------- 1
```

1. UTC of position fix
2. Status: A=data valid,
   V=navigation receiver warning
   (See NOTE 1.)
3. Latitude, N/S
4. Longitude, E/W
5. Speed over ground, knots
6. Course over ground, degrees true
7. Not used
8. Mode indicator
   (See NOTE 2 and 3.)
9. Navigational Status Indicator
10. Checksum

NOTE 1: The navigational status indicator is according to IEC 61108 requirements on ‘Navigational (or Failure) warnings and status indications’. This field should not be a NULL field and the character should take one of the following values:

S = Safe — When the estimated positoning accuracy (95 % confidence) is within the selected accuracy level corresponding to the actual navigation mode, and/or integrity is available and within the requirements for the actual navigation mode, and/or a new valid position has been calculated within 1 s for a conventional craft and 0.5 s for a high speed craft.

C = Caution — When integrity is not available

U = Unsafe — When the estimated positioning accuracy (95 % confidence) is less than the selected accuracy level corresponding to the actual navigation mode, and/or integrity is available but exceeds the requirements for the actual navigation mode, and/or a new valid position has not been calculated within 1 s for a conventional craft and 0.5 s for a high speed craft.

V = Navigational status not valid, equipment is not providing navigational status indication.

NOTE 2: Positioning system Mode indicator;

A = Autonomous. Satellite system used in non-differential mode in position fix
D = Differential. Satellite system used in differential mode in position fix
E = Estimated (dead reckoning) mode
F = Float RTK. Satellite system used in real time kinematic mode with floating integers
M = Manual input mode
N = No fix. Satellite system not used in position fix, or fix not valid
P = Precise. Satellite system used in precision mode. Precision mode is defined as: no deliberate degradation (such as selective availability) and higher resolution code (P-code) is used to compute position fix. P is also used for satellite system used in multi-frequency, SBAS or Precise Point Positioning (PPP) mode.
R = Real time kinematic. Satellite system used in RTK mode with fixed integers
S = Simulator mode

NOTE 3: The positioning system Mode indicator field supplements the positioning system status field, the status field should not be set to V = Invalid for all values of Indicator mode except for A = Autonomous and D = Differential. The positioning system Mode indicator and status fields should not be null fields.

SSD-AIS ship static data

```
$--SSD,c--c,c--c,xxx,xxx,xx,xx,c, aa*hh<CR><LF>
          |    |    |    |   |  | |  |   |
          |    |    |    |   |  | |  |   +--9
          |    |    |    |   |  | |  +--- 8
          |    |    |    |   |  | +----- 7
          |    |    |    |   |  +------- 6
          |    |    |    |  +---------- 5
          |    |    |   +-------------- 4
          |    |   +----------------- 3
          |    +--------------------- 2
         +-------------------------- 1
```

1. Ship's Call Sign, 1 to 7 characters
2. Ship's Name, 1 to 20 characters
3. Pos. ref. point distance, "A," from bow, 0 to 511 Meters
4. Pos. ref. point distance, "B," from stern, 0 to 511 Meters
5. Pos. ref. point distance, "C," from port beam, 0 to 63 Meters
6. Pos. ref. point distance, "D," from starboard beam, 0 to 63 Meters
7. DTE indicator flag
8. Not used
9. Checksum

THS-True heading and status

```
$--THS,x.x,a*hh<CR><LF>
         |    |
         |   +----------- 2
        +---------------- 1
```

1. Heading, degrees true
2. Mode indicator (See NOTE.)

NOTE: Mode indicator. This field shoud not be null.
A = Autonomous
E = Estimated (dead reckoning)
M = Manual input
S = Simulator mode
V = Data not valid (including standby)

VBW-Dual ground/water speed

```
$--VBW,x.x,x.x,A,x.x,x.x,A,x.x,A,x.x,A*hh<CR><LF>
         |   | |   |   | |  | |  |  |  |
         |   | |   |   | |  | |  |  |  +--- 11
         |   | |   |   | |  | |  |  +------ 10
         |   | |   |   | |  | |  +-------- 9
         |   | |   |   | |  | +----------- 8
         |   | |   |   | |  +-------------- 7
         |   | |   |   | +----------------- 6
         |   | |   |  +-------------------- 5
         |   | |  +----------------------- 4
         |   |  +-------------------------- 3
         |  +----------------------------- 2
        +------------------------------- 1
```

1. Not used
2. Not used
3. Not used
4. Longitudinal ground speed, knots
5. Transverse ground speed, knots
6. Status: ground speed, A=data valid V=data invalid
7. Not used
8. Not used
9. Not used
10. Not used
11. Checksum

VSD-AIS voyage static data

```
$--VSD,x.x,x.x,x.x,c--c,hhmmss.ss,xx,xx,x.x,x.x*hh<CR><LF>
          |   |   |    |          |       |   |   |   |   |
          |   |   |    |          |       |   |   |   |   +--- 10
          |   |   |    |          |       |   |   |   +------ 9
          |   |   |    |          |       |   |   +---------- 8
          |   |   |    |          |       |   +------------- 7
          |   |   |    |          |   +----------------- 6
          |   |   |    |        +------------------------ 5
          |   |   |   +------------------------------ 4
          |   |  +------------------------------------ 3
          |  +------------------------------------------ 2
         +------------------------------------------------ 1
```

1. Type of ship and cargo category, 0 to 255
2. Maximum present static draught, 0 to 25.5 Meters
3. Persons on-board, 0 to 8191
4. Destination, 1-20 characters
5. Estimated UTC of arrival at destination
6. Estimated day of arrival at destination, 00 to 31(UTC)
7. Estimated month of arrival at destination, 00 to 12(UTC)
8. Navigational status, 0 to 15
9. Regional application flags, 0 to 15
10. Checksum

VTG-Course over ground and ground speed

```
$--VTG,x.x,T,x.x,M,x.x,N,x.x,K,a*hh<CR><LF>
          |  |  |  |  |  |  |  | |  |
          |  |  |  |  |  |  |  | |  +------- 6
          |  |  |  |  |  |  |  | +--------- 5
          |  |  |  |  |  |  +---+----------- 4
          |  |  |  |  +--+----------------- 3
          |  |  +--+----------------------- 2
          +-+---------------------------- 1
```

1. Course over ground, degrees true
2. Not used
3. Speed over ground, knots
4. Speed over ground, km/h
5. Mode indicator (See NOTE.)
6. Checksum

NOTE : The Mode indicator provides status information about the operation of the source device (such as positioning systems, velocity sensors, etc.) generating the sentence, and the validity of data being provided. the possible indications are as follows:

A = Autonomous
D = Differential
E = Estimated (dead reckoning)
M = Manual input
P = Precise. Satellite system used in precision mode. Precision mode is defined as: no deliberate degradation (such as selective availability) and higher resolution code (P-code) is used to compute position fix. P is also used for satellite system used in muti-frequency, SBAS or Precise Point Positioning (PPP) mode.
S = Simulator
N = Data not valid

The Mode indicator field should not be a null field.

Output sentences

ABK-UAIS addressed and binary broadcast acknowledgement

```
$--ABK,xxxxxxxxx,a,x.x,x,x*hh<CR><LF>
       |        |  |  |  |  |
       |        |  |  |  |  +--- 6
       |        |  |  | +------ 5
       |        |  |  +-------- 4
       |        |  +---------- 3
       |        +------------- 2
       +------------------- 1
```

1. MMSI of the addressed AIS unit
2. AIS channel of reception
3. Message type
4. Message sequence number
5. Type of acknowledgement
6. Checksum

ACA-AIS channel assignment message

```
$--ACA,x,IIII.I, a,yyyyy.y,a,IIII.I,a,yyyyy.y,a,x,xxxx,x,xxxx,x,x,x,a,x,hhmmss.s*hh<CR><LF>
```

1. Sequence number, 0 to 9
2. Region Northeast corner latitude - N/S
3. Region Northeast corner longitude - E/W
4. Region Southwest corner latitude - N/S
5. Region Southwest corner longitude - E/W
6. Transition Zone Size
7. Channel A
8. Channel A bandwidth
9. Channel B
10. Channel B bandwidth
11. Tx/Rx mode control
12. Power level control
13. Not used
14. In-use flag
15. Time of in-used change

ACS-Channel management information source

```
$--ACS,x,xxxxxxxxx,hhmmss.ss,xx,xx,xxxx*hh<CR><LF>
```

1. Sequence number, 0 to 9
2. MMSI of originator
3. UTC at receipt of regional operating settings
4. UTC day, 01- to 31
5. UTC month, 01 to 12
6. UTC year

ALR-Set alarm state

```
$--ALR,hhmmss.ss,xxx,A,A,c--c*hh<CR><LF>
       |          |  |  |  |   |
       |          |  |  |  |   +------------- 6
       |          |  |  |  +----------------- 5
       |          |  |  +--------------------- 4
       |          |  +----------------------- 3
       |         +------------------------- 2
       +------------------------------- 1
```

1. Time of alarm condition change, UTC
2. Local alarm number(identifier)
3. Alarm condition(A=threshold exceeded, V=not exceeded)
4. Alarm's acknowledge state, A=acknowledged V=unacknowledged
5. Alarm's description text
6. Checksum

TXT-Text transmission

```
$--TXT,xx,xx,xx,c--c*hh<CR><LF>
       |  |  | |  |  |
       |  |  | |  |  +--- 5
       |  |  | +--+----- 4
       |  |  +---------- 3
       | +------------- 2
      +---------------- 1
```

1. Total number of message, 01 to 99
2. Message number, 01 to 99
3. Text identifier
4. Text Message
5. Checksum

VDM-AIS VHF data-link message

```
!--VDM,x,x,x,a,s--s,x*hh<CR><LF>
      | | | |   |  |  |
      | | | |   |  | +--- 7
      | | | |   |  +----- 6
      | | | |  +-------- 5
      | | |+------------ 4
      | |+------------- 3
      |+-------------- 2
     +----------------- 1
```

1. Total number of sentences needed to transfer the message, 1 to 9
2. Message sentence number, 1 to 9
3. Sequential message identifier, 0 to 9
4. AIS channel
5. Encapsulated ITU-R M.1371 radio message
6. Number of fill-bits, 0 to 5
7. Checksum

VDO-AIS VHF data-link own vessel report

```
!--VDO,x,x,x,a,s--s,x*hh<CR><LF>
      | | | |   |  |  |
      | | | |   |  | +--- 7
      | | | |   | +----- 6
      | | | |  +-------- 5
      | | |+------------ 4
      | |+------------- 3
      |+--------------- 2
     +----------------- 1
```

1. Total number of sentences needed to transfer the message, 1 to 9
2. Message sentence number, 1 to 9
3. Sequential message identifier, 0 to 9
4. AIS channel
5. Encapsulated ITU-R M.1371 radio message
6. Number of fill-bits, 0 to 5
7. Checksum

VTG-Course over ground and ground speed

```
$--VTG,x.x,T,x.x,M,x.x,N,x.x,K,a*hh<CR><LF>
          |  |  |  |  |  |  |  |  |  |
          |  |  |  |  |  |  |  |  |  +------- 6
          |  |  |  |  |  |  |  |  +--------- 5
          |  |  |  |  |  |  +---+----------- 4
          |  |  |  |  +--+----------------- 3
          |  |  +--+----------------------- 2
          +-+---------------------------- 1
```

1. Course over ground, degrees true
2. Not used
3. Speed over ground, knots
4. Speed over ground, km/h
5. Mode indicator (See NOTE.)
6. Checksum

NOTE : The Mode indicator provides status information about the operation of the source device (such as positioning systems, velocity sensors, etc.) generating the sentence, and the validity of data being provided. the possible indications are as follows:

A = Autonomous
D = Differential
E = Estimated (dead reckoning)
M = Manual input
P = Precise. Satellite system used in precision mode. Precision mode is defined as: no deliberate degradation (such as selective availability) and higher resolution code (P-code) is used to compute position fix. P is also used for satellite system used in muti-frequency, SBAS or Precise Point Positioning (PPP) mode.
S = Simulator
N = Data not valid

The Mode indicator field should not be a null field.

GGA-Global positioning system (GPS) fix data

```
$--GGA,hhmmss.ss,llll.ll,a,yyyyy.yy,a,x,xx,x.x,x.x,M,x.x,M,x.x,xxxx*hh<CR><LF>
          |         |   |       |   | | | |   |   |   |   | |    |   |
          |         |   |       |   | | | |   |   |   |   | |    |   +-- 11
          |         |   |       |   | | | |   |   |   |   | |    +---- 10
          |         |   |       |   | | | |   |   |   |   | +--------- 9
          |         |   |       |   | | | |   |   |   | +---+----------- 8
          |         |   |       |   | | | |   |   +---+----------------- 7
          |         |   |       |   | | | |   +------------------------ 6
          |         |   |       |   | | | +---------------------------- 5
          |         |   |       |   | | +------------------------------ 4
          |         |   |       +---+----+---------------------------- 3
          |         +---+-------------------------------------------- 2
          +------------------------------------------------------------ 1
```

1. Not used
2. Latitude, N/S
3. Longitude, E/W
4. GPS quality indicator
5. Not used
6. Not used
7. Not used
8. Not used
9. Not used
10. Not used
11. Checksum

ZDA-Time and date

```
$--ZDA,hhmmss.ss,xx,xx,xxxx,xx,xx*hh<CR><LF>
          |      | | | | | | |
          |      | | | | | +--------- 7
          |      | | | | +----------- 6
          |      | | | +-------------- 5
          |      | | +------------------ 4
          |      | +---------------------- 3
          |      +------------------------- 2
          +---------------------------------- 1
```

1. UTC
2. Day, 01 to 31 (UTC)
3. Month, 01 to 12 (UTC)
4. Year (UTC)
5. Local zone hours, 00h to +-13h
6. Local zone minutes, 00 to +59 as local time
7. Checksum

SPECIFICATIONS OF CLASS B AIS TRANSPONDER FA-50

1 GENERAL

1.1	Type	Class B AIS Transponder
1.2	RX capacity	2250 report/minute, 1channel 4500 report/minute, 2channel
1.3	RX system	CSTDMA dual wave simultaneous reception
1.4	Synchronous framing	Indirect synchronize from external oscillator
1.5	Operating mode	Autonomous, Assigned, polled/interrogation response
1.6	Frequency switching	Automatic
1.7	Prevention of abnormal TX	Auto-suspend for detecting TX more than 1 second
1.8	Regulations	IMO MSC.140 (76), IEC 62287-1, ITU-R M.1371-5, DSC ITU R M.825-3, IEC 60945 ed.4 adopted

2 TRANSMITTER

2.1	Frequency range	156.025 MHz to 162.025 MHz (F1D)
2.2	Output power	1W/2W
2.3	Channel interval	25 kHz
2.4	Frequency deviation	±3 ppm or less
2.5	Transmit speed	9600 bps ± 50 ppm
2.6	Spurious Emission	9 kHz to 1 GHz, -36 dBm or less 1 GHz to 4 GHz, -30 dBm or less
2.7	Transmission interval	30 s (SOG>2kt), 3 min. (SOG≦2kt)

3 AIS RECEIVER

3.1	Frequency range	156.025 MHz to 162.025 MHz (DSC: 156.525 MHz)
3.2	Oscillator frequency	1st local oscillator: f + (51.136/51.236 MHz) 2nd local oscillator: 51.1/51.2 MHz
3.3	Intermediate frequency	1st: 51.136/51.236 MHz, 2nd: 36 kHz
3.4	Receiving system	Double-conversion superheterodyne
3.5	Sensitivity	-107 dBm (PER 20% or less)
3.6	Error at high input level	-7 dBm
3.7	Co-channel rejection	10 dB
3.8	Adjacent channel selectivity	70 dB
3.9	Spurious response	70 dB (50 MHz to 520 MHz)
3.10	Inter-modulation	65 dB
3.11	Sensitivity suppression	86 dB (±5 MHz, ±10 MHz)

4 DSC RECEIVER (TIMESHARING SYSTEM)

4.1	Frequency	156.525 MHz (CH70)
4.2	Sensitivity	-107 dBm or less
4.3	Error at high input level	-7 dBm
4.4	Co-channel rejection	10 dB
4.5	Adjacent channel selectivity	70 dB
4.6	Spurious response	70 dB

4.7	Inter-modulation	65 dB
4.8	Sensitivity suppression	84 dB

4 GPS RECEIVER

4.1	Receiving frequency	1575.42 MHz
4.2	Tracking code	C/A code
4.3	Number of channel	12 channels parallel, 12 satellites
4.4	Position fixing method	All in view, 8-state Kalman filter
4.5	Position accuracy	10 m approx., 95% of the time, (HDOP ≤ 4) DGPS: 5m approx., 95% of the time
4.6	Tracking velocity	900 kts
4.7	Position fixing time	Warm start: 36 s typical, Cold start: 43 s typical
4.8	Geoids	WGS84
4.9	Position update interval	1 s
4.10	DGPS data correcting	By AIS information

5 INTERFACE

5.1	COM I/O	
	Input:	RS-422 (38.4kbps) / IEC61162-1 Ed.4 (2010-11) ACK, BBM, DTM, GBS, GGA, GLL, GNS, HDT, OSD, RMC, SSD, THS, VBW, VSD, VTG, AIQ, DSC, DSE, PFEC
	Output:	RS-422 (38.4kbps) ABK, ACA, ACS, ALR, VDM, VDO, TXT, PFEC
5.2	NETWORK	Ethernet 10BASE-T/100BASE-TX
	Input:	ACK, BBM, DTM, GBS, GGA, GLL, GNS, HDT, OSD, RMC, SSD, THS, VBW, VSD, VTG, AIQ, DSC, DSE, PFEC
	Output:	ABK, ACA, ACS, ALR, GGA, VDM, VDO, VTG, ZDA, TXT, PFEC
5.3	Function alarm	LED indication, series data output

6 POWER SUPPLY

12-24 VDC: 2.0-1.0 A

7 ENVIRONMENTAL CONDITIONS

7.1	Ambient temperature	
	Antenna unit	-30°C to +70°C
	Transponder	-15°C to +55°C
7.2	Relative humidity	93% or less at +40°C
7.3	Degree of protection	
	Antenna unit	IPX6
	Transponder	IP20
7.4	Vibration	IEC 60945

8 COATING COLOR

8.1	GPS antenna unit	N9.5
8.2	Transponder	N2.5

A-1

FURUNO

CODE NO.	001-176-030-00	24AA-X-9405 -3
TYPE	CP24-00141	1/1

工事材料表

INSTALLATION MATERIALS

番号 NO.	名称 NAME	略図 OUTLINE	型名／規格 DESCRIPTIONS	数量 Q'TY	用途／備考 REMARKS
1	ANT取付金具 ANTENNA BRACKET	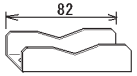	24-003-3015-0 ROHS CODE NO. 100-302-670-10	2	
2	ｺﾝﾍﾞｯｸｽ CABLE TIE	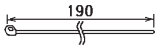	CV-200HT CODE NO. 000-162-191-10	2	
3	六角ﾅｯﾄ 1ｼｭ HEX.NUT		M8 SUS304 CODE NO. 000-167-479-10	8	
4	ﾐｶﾞｷ丸平座金 FLAT WASHER		M8 SUS304 CODE NO. 000-167-464-10	4	
5	ｺﾈｸﾀ(N) CONNECTOR	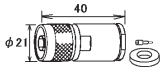	N-P-8DSFA CODE NO. 000-167-921-10	2	

型式/ｺｰﾄﾞ番号が２段の場合、下段より上段に代わる過渡期品であり、どちらかが入っています。 なお、品質は変わりません。

TWO TYPES AND CODES MAY BE LISTED FOR AN ITEM. THE LOWER PRODUCT MAY BE SHIPPED IN PLACE OF THE UPPER PRODUCT. QUALITY IS THE SAME.

（略図の寸法は、参考値です。 DIMENSIONS IN DRAWING FOR REFERENCE ONLY.）

FURUNO ELECTRIC CO., LTD.

C4417-M05-D

PACKING LIST

24AC-X-9870 -1 1/1

GVA-100-T/-HK

A-2

NAME	OUTLINE	DESCRIPTION/CODE No.	Q'TY
ユニット UNIT			
複合空中線部 GPS/VHF COMBINED ANTENNA	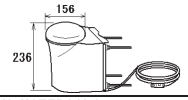	GVA-100-T/HK 000-041-942-00 **	1
工事材料 INSTALLATION MATERIALS			
工事材料 INSTALLATION MATERIALS		CP24-00141 001-176-030-00	1

ｺｰﾄﾞ番号末尾の[**]は、選択品の代表ｺｰﾄﾞを表します。
CODE NUMBER ENDING WITH "**" INDICATES THE CODE NUMBER OF REPRESENTATIVE MATERIAL.

型式/ｺｰﾄﾞ番号が2段の場合、下段より上段に代わる過渡期品であり、どちらかが入っています。 なお、品質は変わりません。

TWO TYPES AND CODES MAY BE LISTED FOR AN ITEM. THE LOWER PRODUCT MAY BE SHIPPED IN PLACE OF THE UPPER PRODUCT. QUALITY IS THE SAME.

（略図の寸法は、参考値です。 DIMENSIONS IN DRAWING FOR REFERENCE ONLY.）

C4431-Z19-B

FURUNO

CODE NO.	005-955-560-00	24AC-X-9403 -5
TYPE	CP24-00502	1/1

工事材料表

INSTALLATION MATERIALS

番号 NO.	名称 NAME	略図 OUTLINE	型名／規格 DESCRIPTIONS		数量 Q'TY	用途／備考 REMARKS
1	変換ｹｰﾌﾞﾙ組品 ADAPTOR CABLE ASSEMBLY		NJ-TP-3DXV-1	CODE NO. 001-248-160-00	1	
2	ｺﾈｸﾀ(N) CONNECTOR	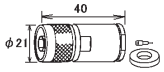	N-P-8DSFA	CODE NO. 000-167-921-10	2	
3	ｺﾈｸﾀ(TNC-N) COAXIAL CONNECTOR ADAPTOR	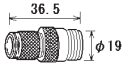	TNCP-NJ	CODE NO. 000-156-599-10	1	
4	絶縁ﾃｰﾌﾟ INSULATION TAPE	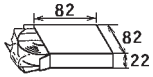	Uﾃｰﾌﾟ 0.5X19X5M	CODE NO. 000-165-833-10	1	
5	ﾋﾞﾆｰﾙﾃｰﾌﾟ VINYL TAPE	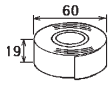	V360K01	CODE NO. 000-177-579-10	1	

型式/ｺｰﾄﾞ番号が２段の場合、下段より上段に代わる過渡期品であり、どちらかが入っています。　なお、品質は変わりません。

TWO TYPES AND CODES MAY BE LISTED FOR AN ITEM. THE LOWER PRODUCT MAY BE SHIPPED IN PLACE OF THE UPPER PRODUCT.
QUALITY IS THE SAME.

（略図の寸法は、参考値です。　DIMENSIONS IN DRAWING FOR REFERENCE ONLY.）

FURUNO

D-1

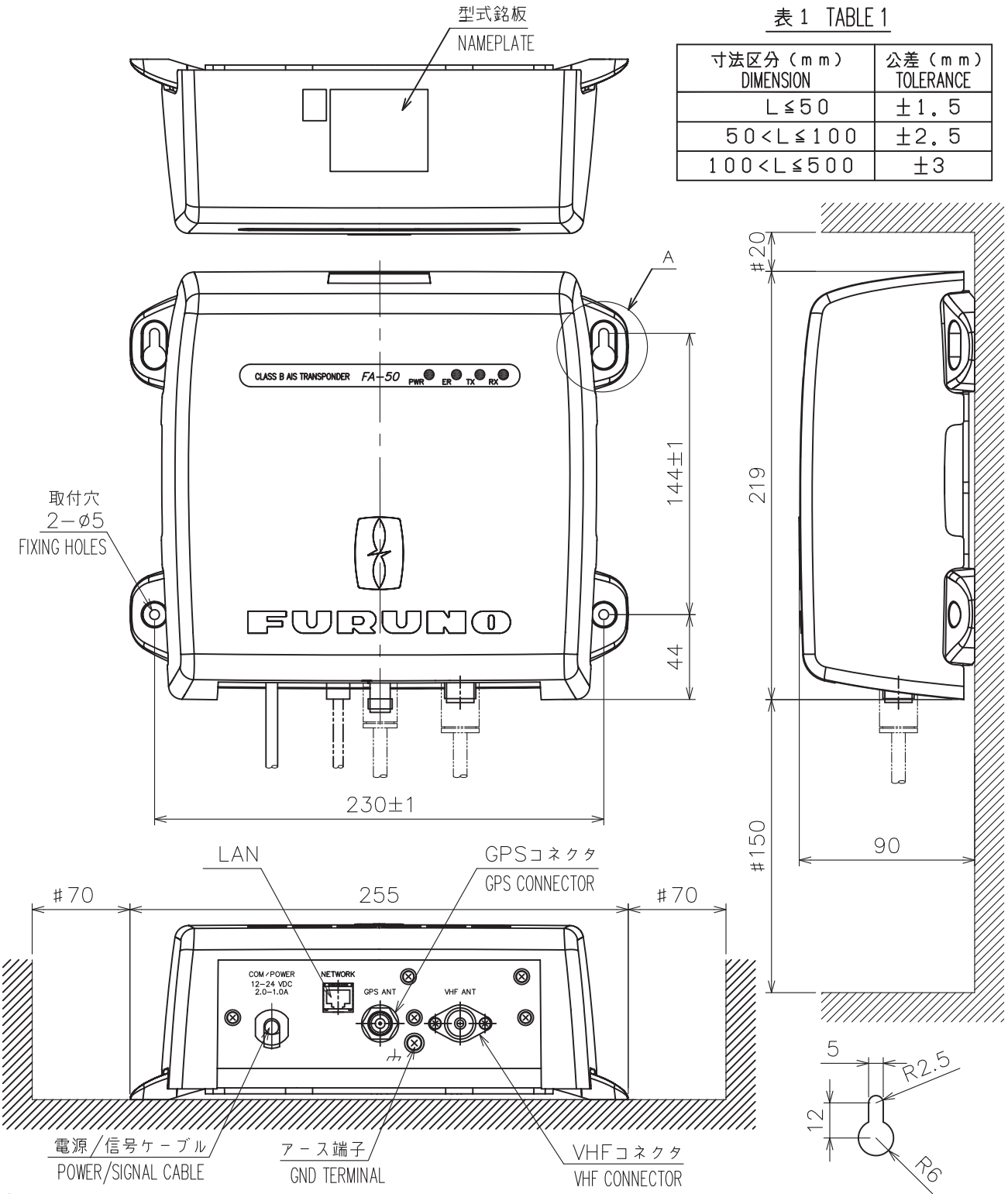

表1 TABLE 1

寸法区分（mm） DIMENSION	公差（mm） TOLERANCE
L≦50	±1.5
50<L≦100	±2.5
100<L≦500	±3

A部詳細（尺度：1/2）
DETAIL OF A (SCALE: 1/2)

注 記
1） 指定外の寸法公差は表1による。
2） #印寸法は最小サービス空間寸法とする。
3） 取付ネジは＋トラスタッピンネジ呼び径4x20を使用のこと。

NOTE
1. TABLE 1 INDICATES TOLERANCE OF DIMENSIONS WHICH IS NOT SPECIFIED.
2. #: MINIMUM SERVICE CLEARANCE.
3. USE TAPPING SCREWS ø4x20 FOR FIXING THE UNIT.

DRAWN 6/Feb/2014 T.YAMASAKI		TITLE	FA-50
CHECKED 6/Feb/2014 H.MAKI		名称	簡易型船舶自動識別装置
APPROVED 7/Feb/2014 H.MAKI			外寸図
SCALE 1/3 MASS 1.7 ±10% kg	質量はケーブル（2m）を含む。 MASS INCLUDES 2m CABLE.	NAME	CLASS B AIS TRANSPONDER
DWG.No. C4442-G01- A	REF.No. 05-097-250G-0		OUTLINE DRAWING

FURUNO ELECTRIC CO., LTD.

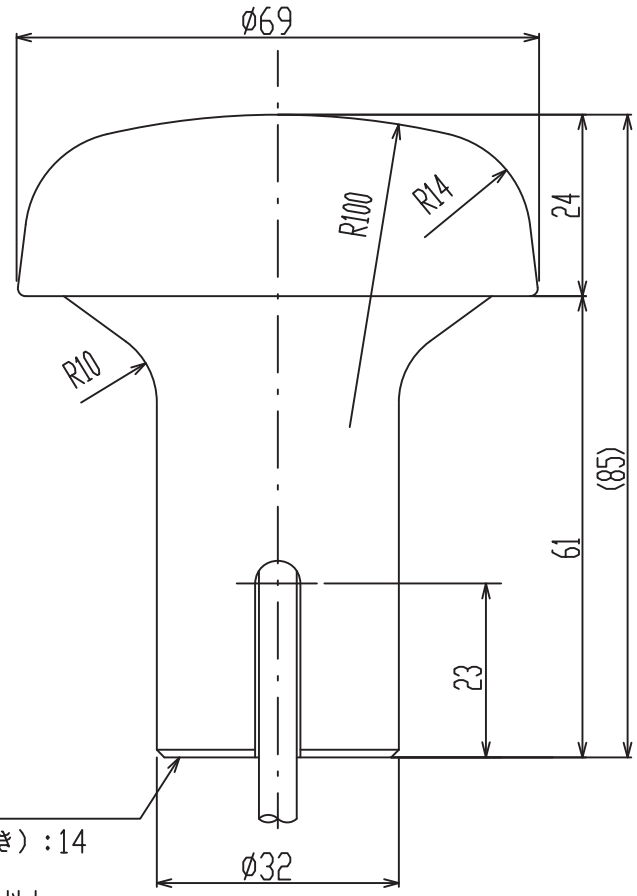

表1 TABLE 1

寸法区分(mm) DIMENSION	公差(mm) TOLERANCE
L ≦ 50	±1.5
50 < L ≦ 100	±2.5
100 < L ≦ 500	±3

1-14UNS1B
ねじ山数（25.4mmにつき）：14
ピッチ： 1.8143 mm
オネジ有効長さ：19 mm以上
オネジ有効径：24.17mm

THREAD PER 25.4mm (1 INCH): 14
PITCH: 1.8143 mm
THREAD LENGTH: 19 mm OR MORE
PITCH DIAMETER: 24.17mm

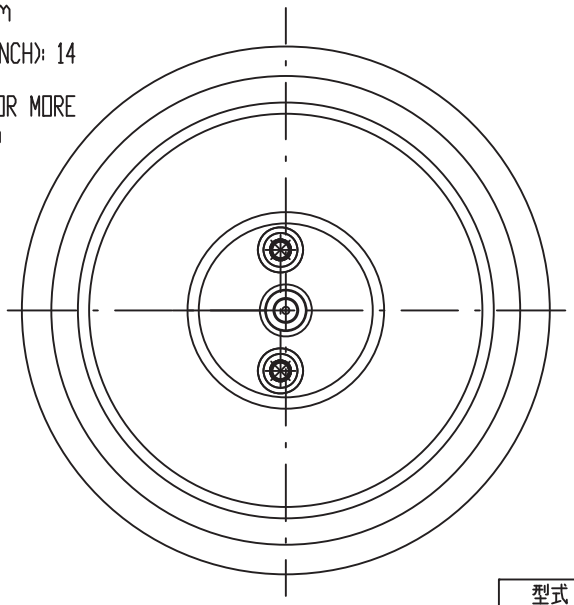

表2 TABLE 2

型式 TYPE	ケーブル長(m) CABLE LENGTH	プラグ PLAG	質量(kg±10%) MASS
GPA-017	10	TNC-P-3	0.6
GPA-017S	0.2	TNC-J-3	0.15

注記
指定外の寸法公差は表1による。

NOTE
TABLE 1 INDICATES TOLERANCE OF DIMENSIONS WHICH IS NOT SPECIFIED.

DRAWN Mar. 27 '07 T.YAMASAKI		TITLE	GPA-017/017S
CHECKED Mar. 27 '07 T.TAKENO		名称	空中線部
APPROVED Mar,27'07 R.Esumi			外寸図
SCALE 1/1 MASS TABLE 2 表2参照		NAME	ANTENNA UNIT
DWG.No. C4384-G04- L			OUTLINE DRAWING

表2 TABLE 2

アンテナ型式 ANTENNA MODEL	FAB-151D	CX4-3/FEC
L(mm)	1245±15	1356±15
質量 MASS (kg±10%)	3.3	3.4

表1 TABLE 1

寸法区分（mm） DIMENSION	公差（mm） TOLERANCE
L≦50	±1.5
50<L≦100	±2.5
100<L≦500	±4
500<L≦1000	±5
1000<L≦2000	

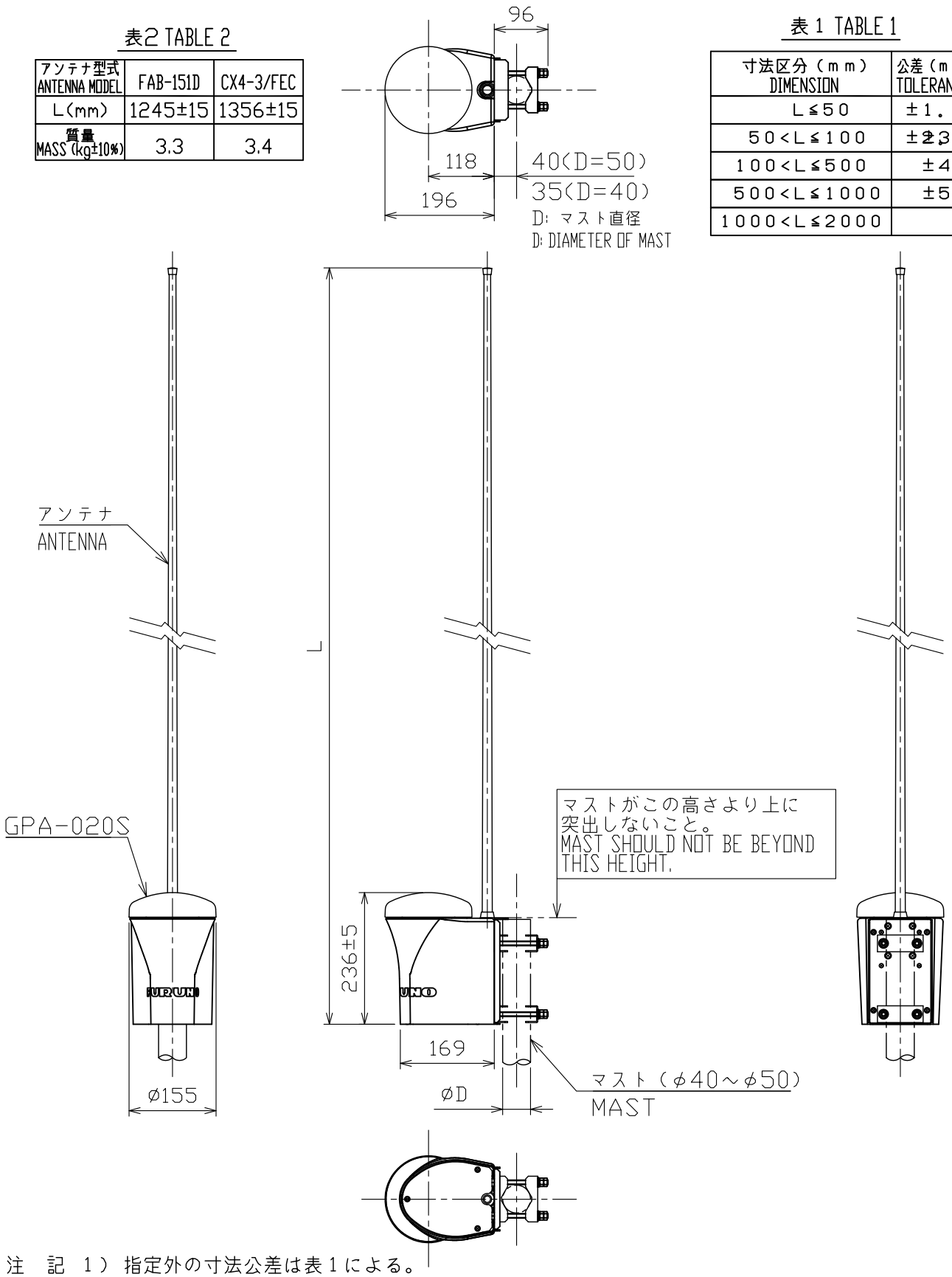

注　記　1）指定外の寸法公差は表1による。

NOTE　1.　TABLE 1 INDICATES TOLERANCE OF DIMENSIONS WHICH IS NOT SPECIFIED.

DRAWN 16/Nov/2018 T.YAMASAKI		TITLE GVA-100-T
CHECKED 16/Nov/2018 H.MAKI		名称 GPS/VHF 複合空中線部
APPROVED 20/Nov/2018 H.MAKI	FA-100/50/150/170	外寸図
SCALE 1/10 MASS 表２参照 TABLE 2		NAME GPS/VHF COMBINED ANTENNA
DWG. No. C4417-G02-K	REF. No. 24-003-301G-4	OUTLINE DRAWING

FURUNO

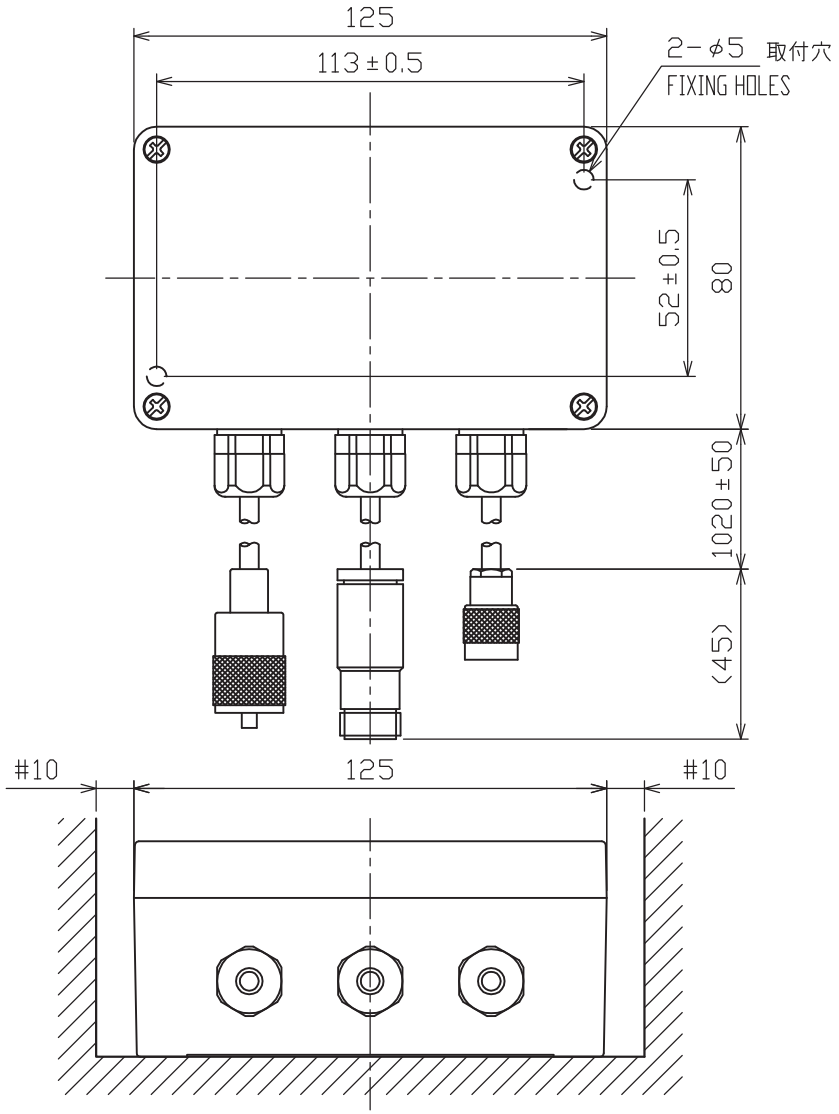

寸法区分（mm） DIMENSION	公差（mm） TOLERANCE
L≦50	±1.5
50<L≦100	±2.5
100<L≦500	±3

表1 TABLE 1

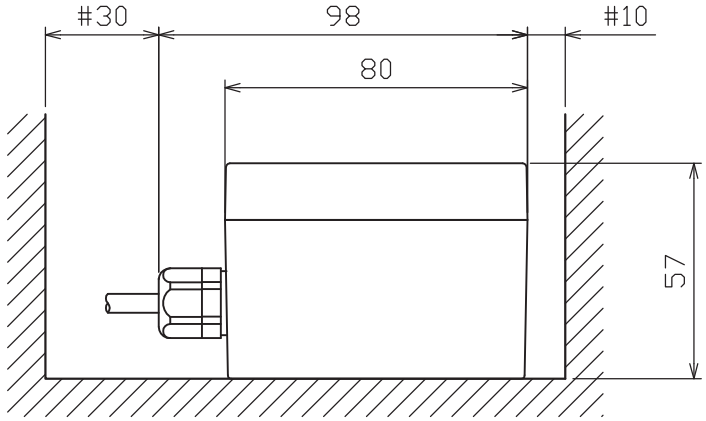

注　記　1）＃印寸法は最小サービス空間寸法とする。
　　2）指定外の寸法公差は表1による。
　　3）取付用ネジは＋ナベタッピンネジ4×30を使用のこと。

NOTE　1. #: RECOMMENDED SERVICE CLEARANCE.
　　2. TABLE 1 INDICATES TOLERANCE OF DIMENSIONS.
　　3. USE TAPPING SCREWS 4x30 FOR FIXING THE UNIT.

DRAWN Jan. 9 '03 T.YAMASAKI			TITLE DB-1
CHECKED Jan. 9 '03 Y.KIMURA			名称 分配器
APPROVED Jan. 9. '03 Y. Kimura	FA-100		外寸図
SCALE 1/2	MASS 0.85 ±10% kg		NAME DISTRIBUTOR
DWG No. C4417-G04-C	24-003-320G-4		OUTLINE DRAWING

FURUNO ELECTRIC CO., LTD.

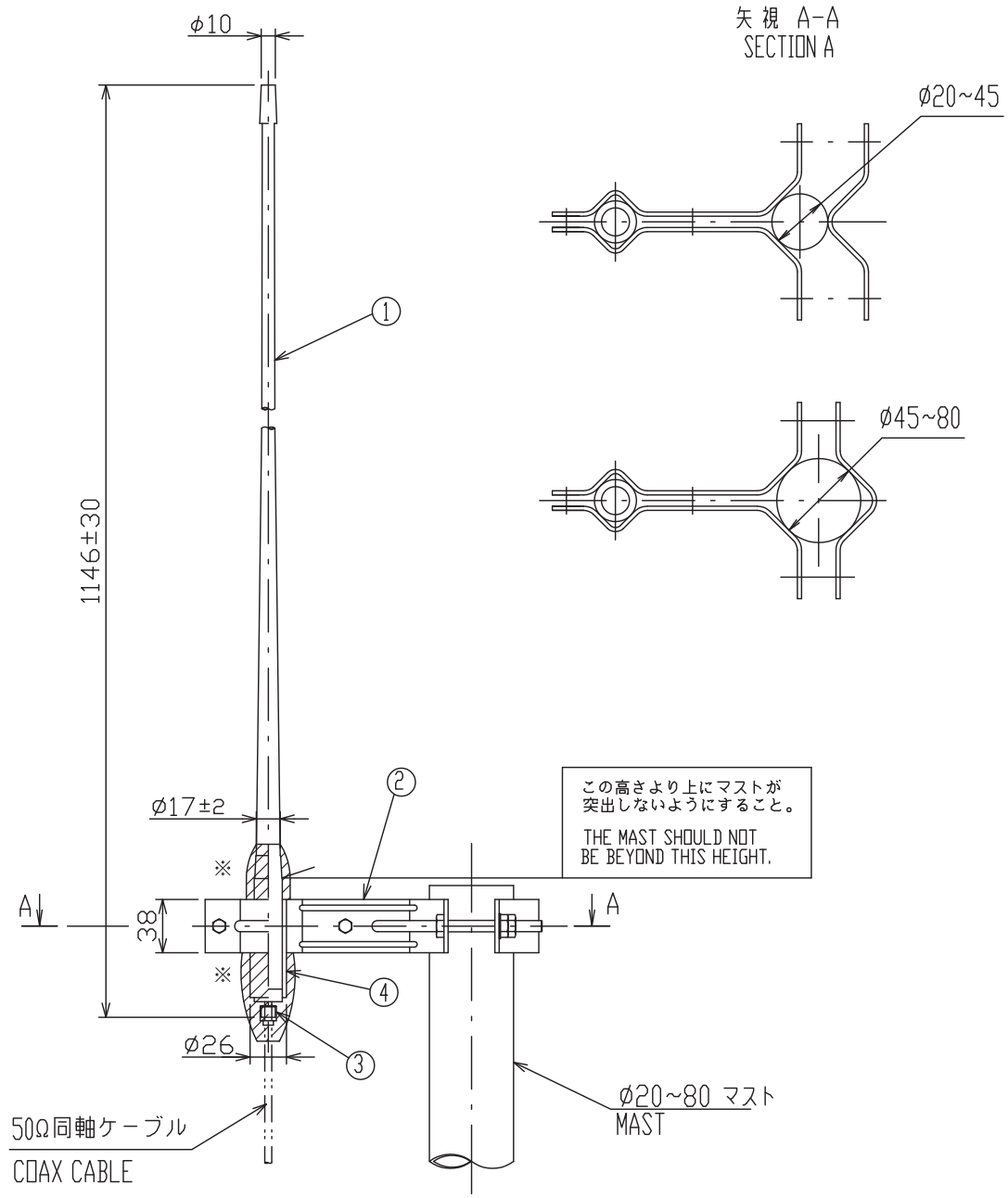

※： 斜線部は自己融着テープを巻き
さらにビニールテープを巻いて
防水処理を行うこと。
SEAL WITH SELF-BONDING TAPE AND
PVC TAPE FOR WATERTIGHTNESS.

品番 ITEM	品名 NAME	材質 MATERIAL	数量 QTY	図番 DWG. No.	摘要 REMARKS
4	固定用パイプ LINEAR PIPE	硬質塩ビ VINYL CHLORIDE	1		
3	同軸コネクタ COAX. CONNECTOR		1		M-R
2	アンテナ取付金具 ANTENNA BRACKET	SUS316L	1 式 SET	M-15AS	t2.5
1	アンテナ棒 ANTENNA ELEMENT	FRP	1	FAB-151D	0.25 kg

DRAWN 4/Aug/2017 T.YAMASAKI		TITLE FAB-151D + M-15AS1
CHECKED 4/Aug/2017 H.MAKI		名称 150MHzホイップアンテナ(取付金具)
APPROVED 10/Aug/2017 H.MAKI		外寸図
SCALE 1/5 MASS 0.7 ±10% kg	質量は取付金具を含む。 MASS INCLUDES BRACKET.	NAME 150MHz WHIP ANTENNA w/ BRACKET
DWG. No. C5011-042- G	REF. No.	OUTLINE DRAWING

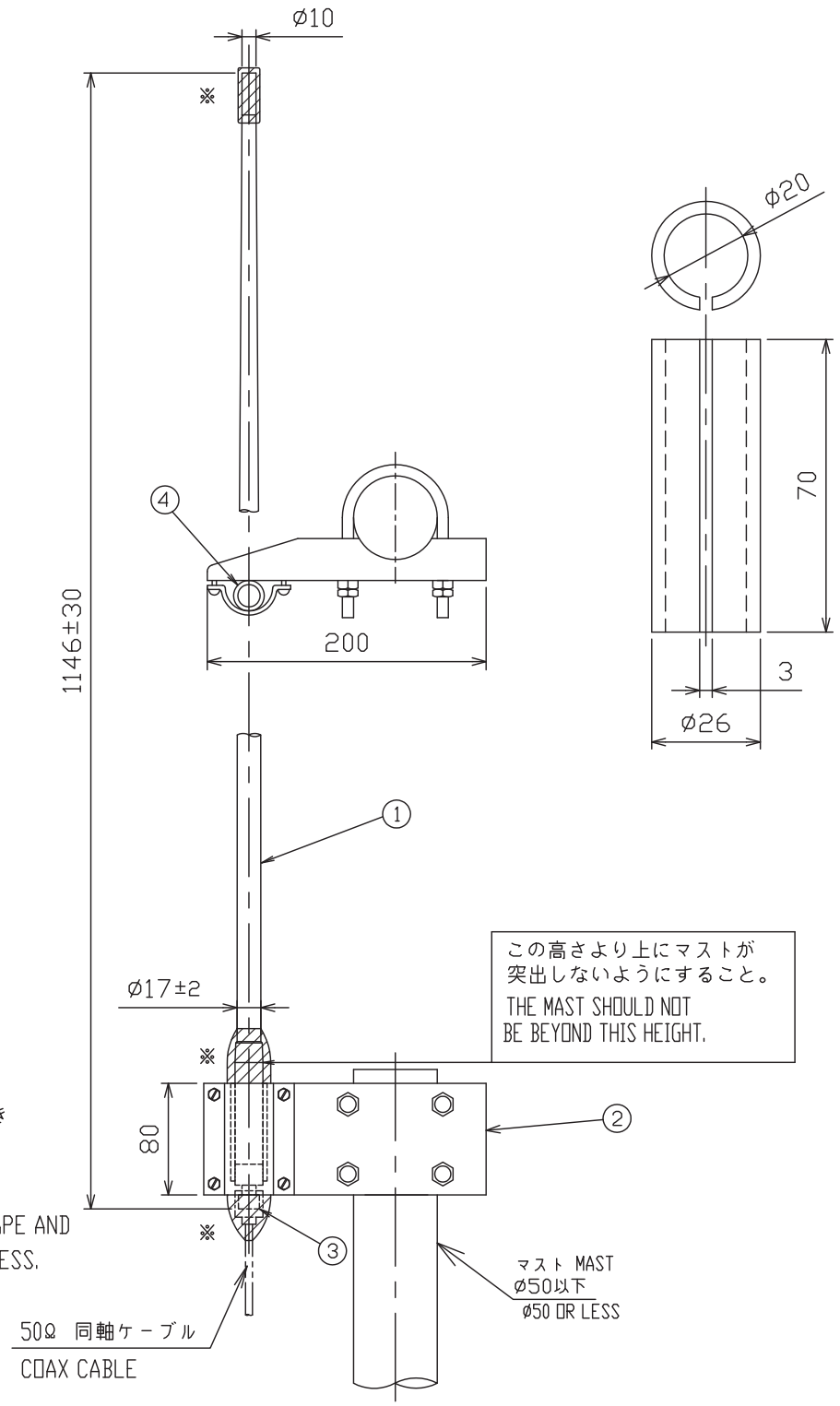

※ 斜線部は自己融着テープを巻き
更にビニールテープを巻いて
防水処理をおこなうこと。

SEAL WITH SELF-BONDING TAPE AND
PVC TAPE FOR WATERTIGHTNESS.

品番 ITEM	品名 NAME	材質 MATERIAL	数量 Q'TY	図番 DWG.No.	摘要 REMARKS
4	固定用パイプ LINER PIPE	硬質塩ビ VINYL CHLORIDE	1		
3	同軸コネクタ COAX. CONNECTOR		1		M-R
2	アンテナ取付金具 ANTENNA BRACKET	SUS	1 式 SET	4-310071	0.6kg
1	アンテナ棒 ANTENNA ELEMENT	FRP	1		0.25kg

DRAWN 4/Aug/2017 T.YAMASAKI		TITLE	FAB-151D
CHECKED 4/Aug/2017 H.MAKI		名称	150MHz ホイップアンテナ
APPROVED 10/Aug/2017 H.MAKI			外寸図
SCALE 1/5	MASS 0.85 ±10% kg	NAME	150MHz WHIP ANTENNA
DWG.No. C5013-019-L	4-110718		OUTLINE DRAWING

FURUNO

取付位置
MOUNTING LOCATION

他の機器のアンテナから下の図の距離以上離す。

THIS FIGURE SHOWS THE SEPARATION DISTANCES FROM OTHER ANTENNAS TO AVOID MUTUAL INTERFERENCE.

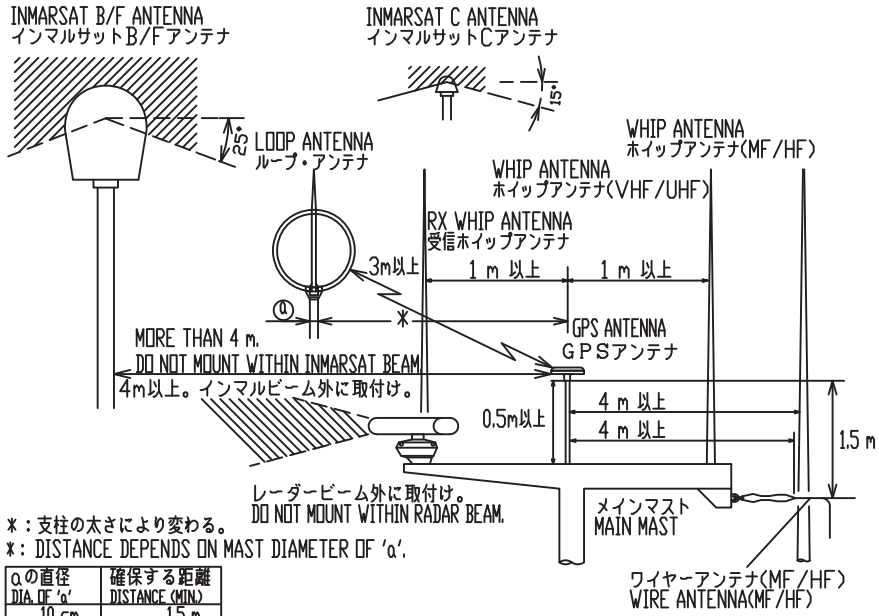

*：支柱の太さにより変わる。
*: DISTANCE DEPENDS ON MAST DIAMETER OF 'a'.

aの直径 DIA. OF 'a'	確保する距離 DISTANCE (MIN.)
10 cm	1.5 m
30 cm	3 m

A）マストへの取付け
MAST MOUNTING

a)マスト取付金具CP20-01111(工事材料)でマストに固定する。
USE MAST MOUNTING KIT CP20-01111.

b)パイプのみを使うとき
USE A PIPE ONLY.

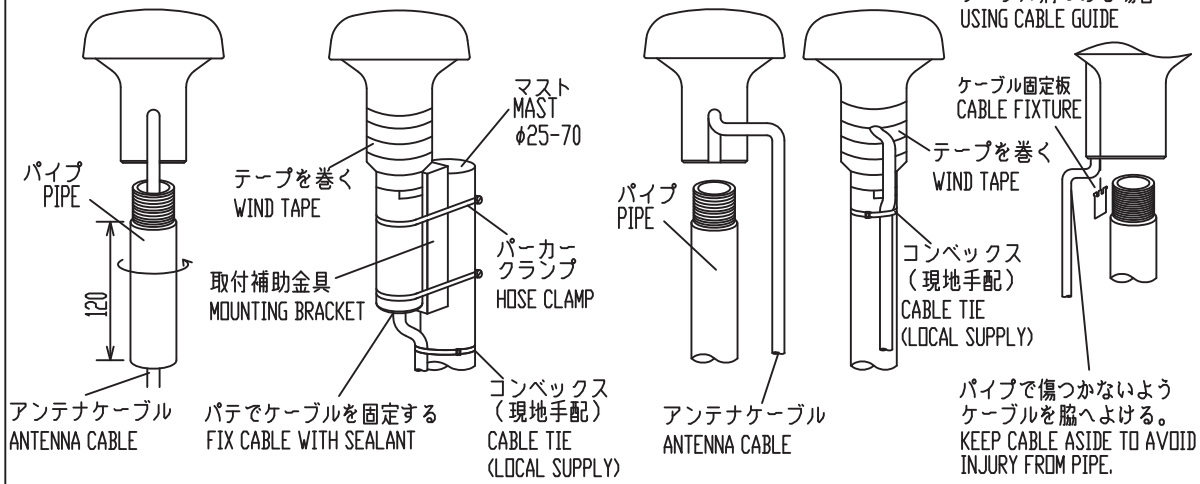

B）スタンションやパルピットにつけるとき
レール用アンテナベース No.13-RC5160
（取付可能レール直径：φ19~φ32）
（コード番号：000-806-114）

HANDRAIL MOUNTING

USE HANDRAIL MOUNTING BASE No.13-RC5160 (CODE No.000-806-114, OPTION).
THE DIAMETER OF THE HANDRAIL MAY BE FROM φ19mm TO φ32mm.

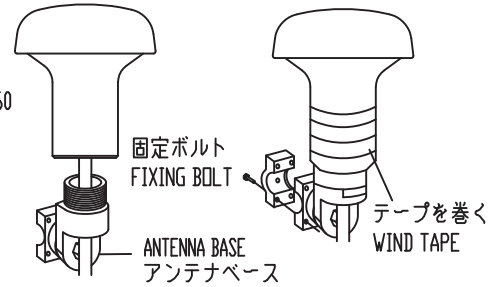

C）取付ける場所が傾斜しているとき
ANTENNA BASE MOUNTING

オプションのアンテナベースを使う。
USE OPTIONAL ANTENNA BASE.

傾斜 INCLINATION	-5° - 33°	32° - 65°	65° - 98°
装備方法 MOUNTING METHOD	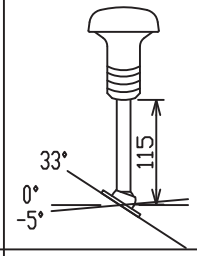	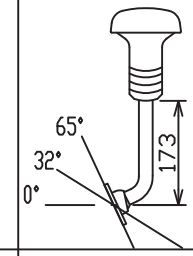	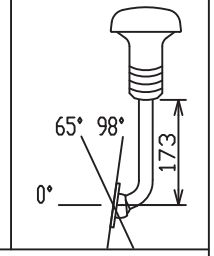
アンテナベース型式 ANT. BASE TYPE コード番号 CODE No.	直型アンテナベース RIGHT ANGLE ANTENNA BASE No.13-QA330 000-803-239	L型アンテナベース L-TYPE ANTENNA BASE No.13-QA310 000-803-240	

アンテナベース基部
MOUNTING DIMENSIONS OF ANTENNA BASE.

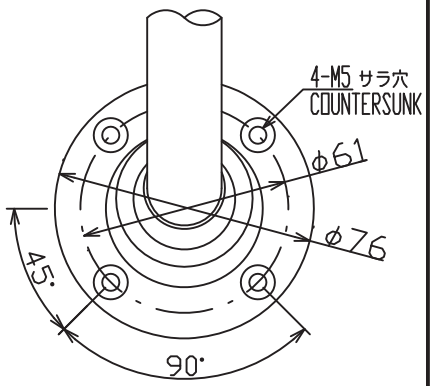

注記 1）パイプやアンテナベースはアンテナユニットにねじ込んだ後に固定する。
2）アンテナを固定するときはパイプ（アンテナベース）をアンテナにねじ込むこと。
アンテナ側をねじるとコネクタ部やケーブルに無理がかかり、故障の原因となる。

NOTE 1. FASTEN PIPE(ANTENNA BASE) TO ANTENNA UNIT FIRST THEN FIX THEM TO MAST OR HANDRAIL.
2. WHEN FIXING ANTENNA, TURN PIPE OR ANTENNA BASE; NOT THE ANTENNA.
TURNING THE ANTENNA MAY TWIST THE CABLE AND PLACE STRESS ON CONNECTOR.

DRAWN 14/MAY/2014 T.YAMASAKI		TITLE	GPA series
CHECKED 14/MAY/2014 H.MAKI		名称	空中線部
APPROVED 15/May/2014 H.MAKI			装備要領図
SCALE / MASS		NAME	ANTENNA UNIT
DWG.No. C4384-Y01- F			INSTALLATION PROCEDURE

FURUNO ELECTRIC CO., LTD.

FURUNO

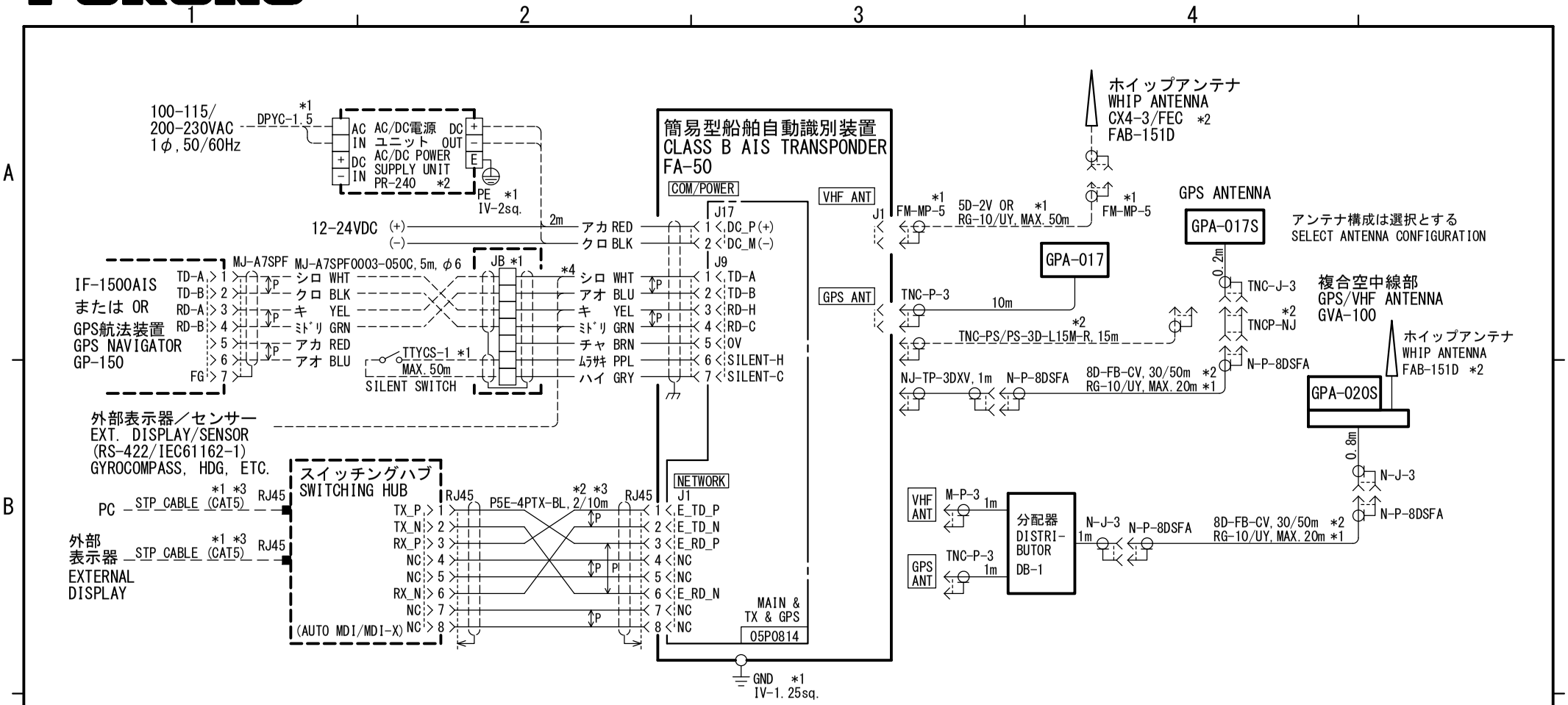

注 記

＊1）造船所手配。

＊2）オプション。

＊3）Auto MDI/MDI-X対応でないHUBのときは、ストレートケーブルを使用する。

＊4）COMラインを使用しないときは、芯線がショートしないようテープで絶縁する。

NOTE

*1: SHIPYARD SUPPLY.

*2: OPTION.

*3: USE STRAIGHT LAN CABLE WHEN A HUB W/O AUTO MDI/MDI-X FUNCTION IS USED.

*4: IF COM LINES ARE NOT USED, TAPE THEM TO PREVENT SHORT-CIRCUIT.

DRAWN 6/Feb/2019 T.YAMASAKI		TYPE	FA-50
CHECKED 6/Feb/2019 H.MAKI		名 称	簡易型船舶自動識別装置
APPROVED 7/Feb/2019 H.MAKI			相互結線図
SCALE / MASS kg		NAME	CLASS B AIS TRANSPONDER
DWG. No. C4442-C01- L	REF. No. 05-097-2002-1		INTERCONNECTION DIAGRAM

S-1

FURUNO ELECTRIC CO., LTD.

INDEX

A
AC-DC power supply 1-14
alarm status 2-6

C
COM PORT 1-19

D
distributor 1-14

F
Fuse 3-2
fuse 3-2

G
GPS antenna 1-5
GPS/VHF combined antenna 1-8

I
index term AP-6
IP address 1-17

M
maintenance 3-1
menu tree AP-1

N
NETWORK 1-20

O
optional supply 1-2
own vessel data 2-3

P
parts lists AP-4
parts location AP-5

S
sensor status 2-7
serial interface I/O circuit AP-7
standard supply 1-1
subnet mask 1-17

T
troubleshooting 3-2

V
VHF antenna 1-3

Declaration of Conformity

[FA-50]

Bulgarian (BG)	С настоящото Furuno Electric Co., Ltd. декларира, че гореспоменат тип радиосъоръжение е в съответствие с Директива 2014/53/ЕС. Цялостният текст на ЕС декларацията за съответствие може да се намери на следния интернет адрес:
Spanish (ES)	Por la presente, Furuno Electric Co., Ltd. declara que el tipo de equipo radioeléctrico arriba mencionado es conforme con la Directiva 2014/53/UE. El texto completo de la declaración UE de conformidad está disponible en la dirección Internet siguiente:
Czech (CS)	Tímto Furuno Electric Co., Ltd. prohlašuje, že výše zmíněné typ rádiového zařízení je v souladu se směrnicí 2014/53/EU. Úplné znění EU prohlášení o shodě je k dispozici na této internetové adrese:
Danish (DA)	Hermed erklærer Furuno Electric Co., Ltd., at ovennævnte radioudstyr er i overensstemmelse med direktiv 2014/53/EU. EU-overensstemmelseserklæringens fulde tekst kan findes på følgende internetadresse:
German (DE)	Hiermit erklärt die Furuno Electric Co., Ltd., dass der oben genannte Funkanlagentyp der Richtlinie 2014/53/EU entspricht. Der vollständige Text der EU-Konformitätserklärung ist unter der folgenden Internetadresse verfügbar:
Estonian (ET)	Käesolevaga deklareerib Furuno Electric Co., Ltd., et ülalmainitud raadioseadme tüüp vastab direktiivi 2014/53/EL nõuetele. ELi vastavusdeklaratsiooni täielik tekst on kättesaadav järgmisel internetiaadressil:
Greek (EL)	Με την παρούσα η Furuno Electric Co., Ltd., δηλώνει ότι ο προαναφερθέντας ραδιοεξοπλισμός πληροί την οδηγία 2014/53/ΕΕ. Το πλήρες κείμενο της δήλωσης συμμόρφωσης ΕΕ διατίθεται στην ακόλουθη ιστοσελίδα στο διαδίκτυο:
English (EN)	Hereby, Furuno Electric Co., Ltd. declares that the above-mentioned radio equipment type is in compliance with Directive 2014/53/EU. The full text of the EU declaration of conformity is available at the following internet address:
French (FR)	Le soussigné, Furuno Electric Co., Ltd., déclare que l'équipement radioélectrique du type mentionné ci-dessusest conforme à la directive 2014/53/UE. Le texte complet de la déclaration UE de conformité est disponible à l'adresse internet suivante:
Croatian (HR)	Furuno Electric Co., Ltd. ovime izjavljuje da je gore rečeno radijska oprema tipa u skladu s Direktivom 2014/53/EU. Cjeloviti tekst EU izjave o sukladnosti dostupan je na sljedećoj internetskoj adresi:
Italian (IT)	Il fabbricante, Furuno Electric Co., Ltd., dichiara che il tipo di apparecchiatura radio menzionato sopra è conforme alla direttiva 2014/53/UE. Il testo completo della dichiarazione di conformità UE è disponibile al seguente indirizzo Internet:
Latvian (LV)	Ar šo Furuno Electric Co., Ltd. deklarē, ka augstāk minēts radioiekārta atbilst Direktīvai 2014/53/ES. Pilns ES atbilstības deklarācijas teksts ir pieejams šādā interneta vietnē:

Lithuanian (LT)	Aš, Furuno Electric Co., Ltd., patvirtinu, kad pirmiau minėta radijo įrenginių tipas atitinka Direktyvą 2014/53/ES. Visas ES atitikties deklaracijos tekstas prieinamas šiuo interneto adresu:
Hungarian (HU)	Furuno Electric Co., Ltd. igazolja, hogy fent említett típusú rádióberendezés megfelel a 2014/53/EU irányelvnek. Az EU-megfelelőségi nyilatkozat teljes szövege elérhető a következő internetes címen:
Maltese (MT)	B'dan, Furuno Electric Co., Ltd., niddikjara li msemmija hawn fuq-tip ta' tagħmir tar-radju huwa konformi mad-Direttiva 2014/53/UE. It-test kollu tad-dikjarazzjoni ta' konformità tal-UE huwa disponibbli f'dan l-indirizz tal-Internet li ġej:
Dutch (NL)	Hierbij verklaar ik, Furuno Electric Co., Ltd., dat het hierboven genoemde type radioapparatuur conform is met Richtlijn 2014/53/EU. De volledige tekst van de EU-conformiteitsverklaring kan worden geraadpleegd op het volgende internetadres:
Polish (PL)	Furuno Electric Co., Ltd. niniejszym oświadcza, że wyżej wymieniony typ urządzenia radiowego jest zgodny z dyrektywą 2014/53/UE. Pełny tekst deklaracji zgodności UE jest dostępny pod następującym adresem internetowym:
Portuguese (PT)	O(a) abaixo assinado(a) Furuno Electric Co., Ltd. declara que o mencionado acima tipo de equipamento de rádio está em conformidade com a Diretiva 2014/53/UE. O texto integral da declaração de conformidade está disponível no seguinte endereço de Internet:
Romanian (RO)	Prin prezenta, Furuno Electric Co., Ltd. declară că menționat mai sus tipul de echipamente radio este în conformitate cu Directiva 2014/53/UE. Textul integral al declarației UE de conformitate este disponibil la următoarea adresă internet:
Slovak (SK)	Furuno Electric Co., Ltd. týmto vyhlasuje, že vyššie spomínané rádiové zariadenie typu je v súlade so smernicou 2014/53/EÚ. Úplné EÚ vyhlásenie o zhode je k dispozícii na tejto internetovej adrese:
Slovenian (SL)	Furuno Electric Co., Ltd. potrjuje, da je zgoraj omenjeno tip radijske opreme skladen z Direktivo 2014/53/EU. Celotno besedilo izjave EU o skladnosti je na voljo na naslednjem spletnem naslovu:
Finnish (FI)	Furuno Electric Co., Ltd. vakuuttaa, että yllä mainittu radiolaitetyyppi on direktiivin 2014/53/EU mukainen. EU-vaatimustenmukaisuusvakuutuksen täysimittainen teksti on saatavilla seuraavassa internetosoitteessa:
Swedish (SV)	Härmed försäkrar Furuno Electric Co., Ltd. att ovan nämnda typ av radioutrustning överensstämmer med direktiv 2014/53/EU. Den fullständiga texten till EU-försäkran om överensstämmelse finns på följande webbadress:

Online Resource

http://www.furuno.com/en/support/red_doc