FS1503 Dimensional Drawings
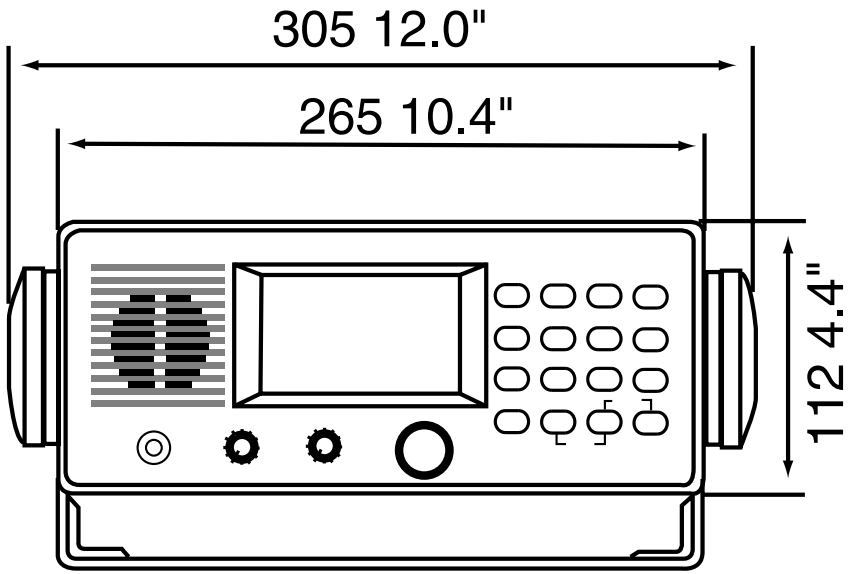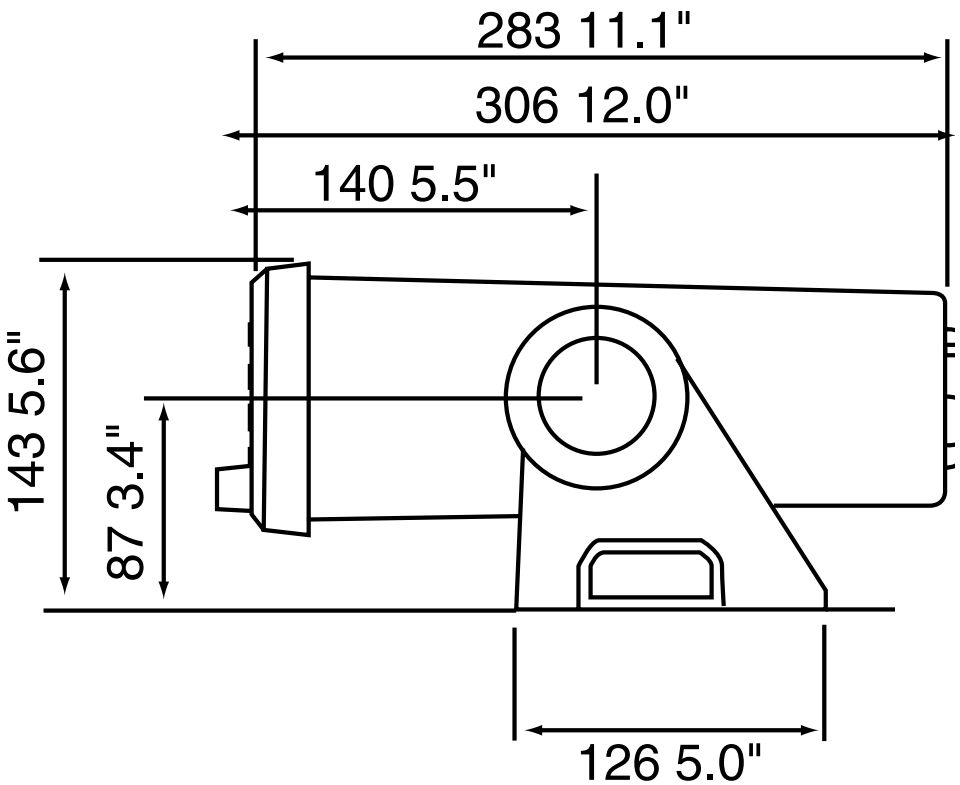
FS1503 5.7 kg 12.6 lb