FCV295 Dimensional Drawings
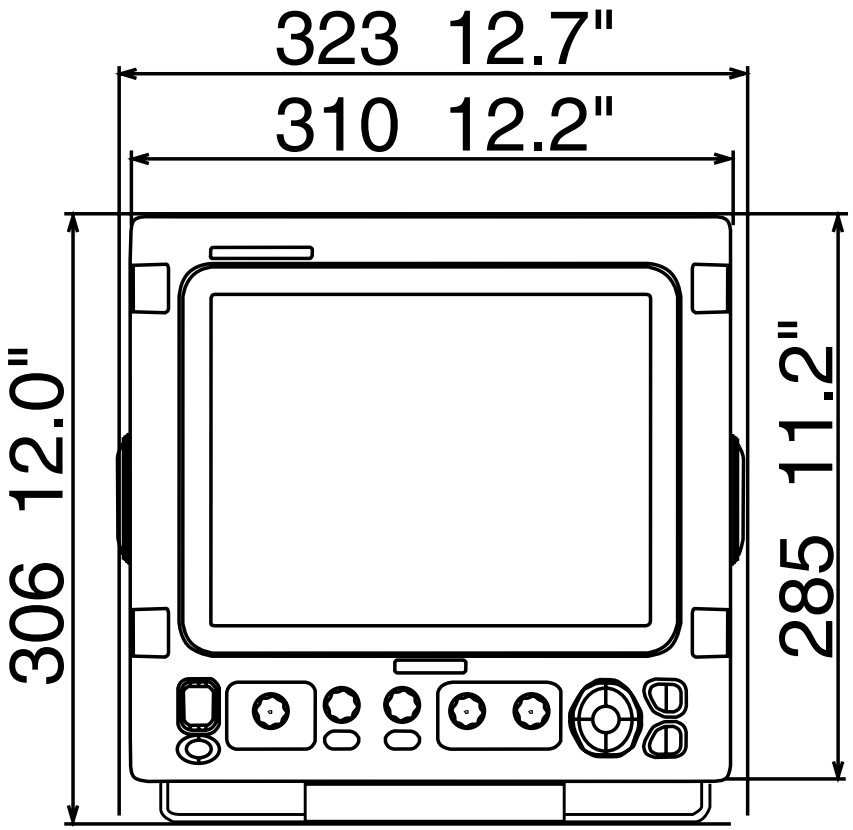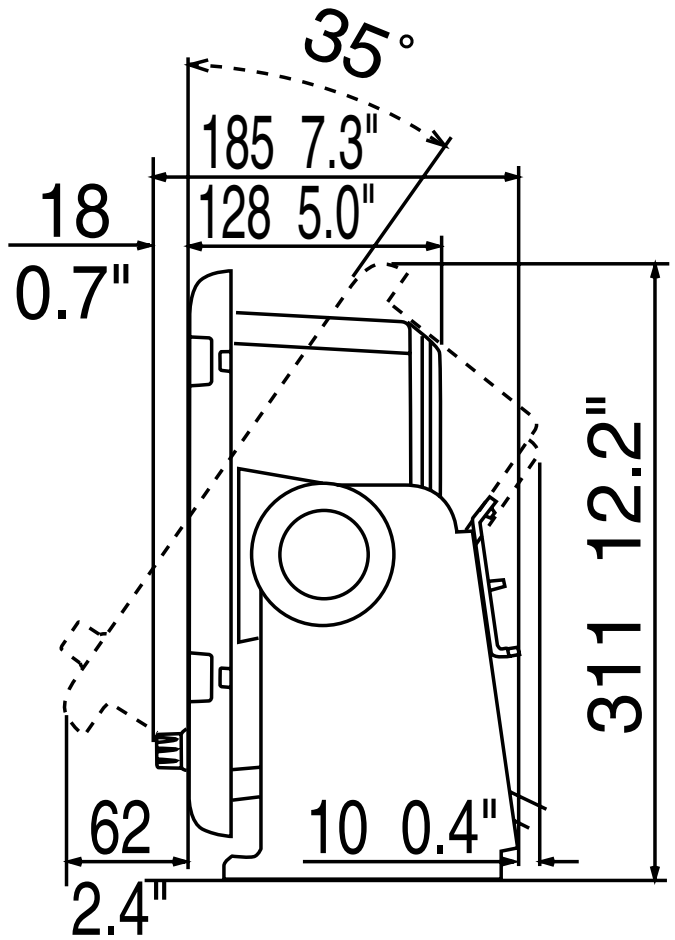
FCV295 7.0 kg 15.4 lb